USB On-The-Go and Embedded Host Automated Compliance Plan

for the On-The-Go& Embedded Host Supplement Revision2.0

Version 1.2

July 27, 2012

Revision History

Revision	Issue Date	Comment
1.0	July 14, 2011	First release.
1.1	May 3, 2012	Additional Test Cases Fixed editorial issues. Added tests for EHs which don't require test mode support. Require a full battery for VBUS testing. Simplifications to manual tests including removing some test peripherals, and only requiring up to 4 concurrent peripherals.
1.2	July 27, 2012	Changes to align the compliance plan with OTG Supplement Rev 1.2, v1.1a. Clarification of test cabling characteristics.

Contributors

Abel Astley	Broadcom Corp.
Daniel Wulcan	Broadcom Corp.
Salyl Bhagwat	Broadcom Corp.
Dan Ellis	DisplayLink (UK) Ltd.
Patrik Olesen	Ericsson AB
Marcin Behrendt	Evatronix SA
Pawel Eichler	Evatronix SA
Tomasz Klimek	Evatronix SA
Harry Peterson	Evatronix SA
Christopher Meyers	Fresco Logic Inc.
Peter Brink	Intel Corporation
Sridharan Ranganathan	Intel Corporation
Brad Saunders	Intel Corporation
Mike Micheletti	LeCroy Corporation
Paul Berg	MCCI Corporation
John Garney	MCCI Corporation
Greg Scaffidi	MCCI Corporation
Pat Crowe	MQP Electronics Ltd.
Sten Carlsen	Nokia Corporation
Maarit Harkonen	Nokia Corporation
Yauheni Kaliuta	Nokia Corporation
Richard Petrie	Nokia Corporation (Chair)
David Wu	Nokia Corporation
Panu Ylihaavisto	Nokia Corporation
Roshan Jhalani	Sasken Communication Tech. Ltd.
Yuva Kumar	Sasken Communication Tech. Ltd.
Srihari Sahyanarayana	Sasken Communication Tech. Ltd.
Mark Bohm	SMSC
Morgan Monks	SMSC
John Sisto	SMSC
Paras Agarwal	ST-Ericsson
Premnath Babu	ST-Ericsson
Nathalie Ballot	ST-Ericsson
Nicolas Florenchie	ST-Ericsson
Adam Burns	Synopsys Inc.
Vishwanath Kakarla	Synopsys Inc.
Sarah Boen	Tektronix Inc.
Pascal Berten	Testronic Labs
Ivo Huber	Texas Instruments
Grant Ley	Texas Instruments

Table of Contents

Table Listings

Figure Listings

1 Introduction

1.1 USB On-The-Go and Embedded Hosts

USB has become a popular interface for exchanging data between a host PC and its peripherals. As computing resources have become less expensive, the line between PCs and other products has blurred. Today many devices that are not PCs in the classic sense have a need to connect directly to peripherals: Printers connect directly with cameras, for example, or mobile phones may need to connect to USB headsets. These non-PCs have the computing resources to manage a USB host function, but they need to function in ways that differ from standard PC hosts. Although they will provide host capability for some devices, it's unreasonable to require them to support the full range of USB peripherals. For example, connecting a camera to a printer makes a lot of sense, but the printer manufacturers may not think it is quite as important for the printer to support a USB GPS dongle. Because this is new territory for USB, developers need a way to understand what USB functionality they need to provide and what functionality is not required.

[USBOTG&EHv2.0] defines these non-PC hosts as Targeted Hosts. A Targeted Host is a USB host that supports a specific, targeted set of peripherals. The developer of each Targeted Host product defines the set of supported peripherals on a Targeted Peripheral List (TPL). A Targeted Host needs to provide only the power, bus speeds, data flow types, etc., that the peripherals on its TPL require.

There are two categories of Targeted Hosts:

1. **Embedded Hosts**: An Embedded Host (EH) product provides Targeted Host functionality over one or more Standard-A receptacles. Embedded Host products may also offer USB peripheral capability, delivered separately via one or more Type-B receptacles.
2. **On-The-Go**: An OTG product is a portable device that uses a single Micro-AB receptacle (and no other USB receptacles) to operate at times as a USB Targeted Host and at times as a USB peripheral. OTG devices must always operate as a standard peripheral when connected to a standard USB host.

The “USB On-The-Go and Embedded Host Automated Compliance Plan” ensures compliance with the added requirements of Targeted Hosts and peripherals which use protocols such as SRP and ADP.

1.2 Objective of the Compliance Program

The benefits of a compliance program have been proven by the USB initiative: the proliferation of knowledge, more stringent testing, and a higher standard of quality. The purpose of the “USB On-The-Go and Embedded Host Automated Compliance Plan” is to utilize the effectiveness of the USB-IF compliance program.

1.3 Scope of the Document

This document tests and/or checks for compliance with requirements specified in [USBOTG&EHv2.0].

1.4 Intended Audience

This specification is intended for developers of:

- Embedded Hosts
- OTG Devices
- Peripherals which support SRP or ADP

1.5 Reference Document(s)

The following referenced documents can be found on the USB-IF website www.usb.org:

[BatteryCharging1.2]	*Universal Serial Bus Battery Charging Specification, revision 1.2*
[Micro-USB1.01]	*Universal Serial Bus Micro-USB Cables and Connectors Supplement to the USB 2.0 Specification,* revision 1.01.
[USB2.0]	*Universal Serial Bus R*evision 2.0 Specification including ECNs and errata
[USB 3.0]	*Universal Serial Bus R*evision 3.0 Specification including ECNs and errata
[USBOTG&EHv2.0]	*USB On-The-Go and Embedded Host Supplement, revision 2.0*
[USBOTG&EHChecklist]	*USB On-The-Go and Embedded Host Checklist.*
[USBCables2.0]	*USB Cables and Connectors Class Document, revision 2.0*
[USBSystemsChecklist]	*USB Compliance Checklist, Systems*
[USBPeripheralChecklist]	*USB Compliance Checklist, Peripheral (Excluding Hubs)*
[USBPeripheralSilicon]	*USB Compliance Checklist, Peripheral Silicon (Excluding Hub Silicon)*
[PET]	*Protocol and Electrical Tester (PET) specification*

2 Acronyms and Terms

This chapter lists and defines terms and abbreviations used throughout this specification. Other terms and abbreviations are provided in [USBOTG&EHv2.0].

A-Device	Device with a Standard-A receptacle or a device with a Micro-A plug inserted into its receptacle. The A-device supplies power to VBUS and is host at the start of a session. If the A-device is On-The-Go (equipped with a Micro-AB receptacle), it may relinquish the role of host to an On-The-Go B-device under certain conditions (see [USBOTG&EHv2.0]).
A-Host	A-device acting in host role
A-Peripheral	A-device acting in peripheral role
A-Port	USB port with an A plug inserted into its receptacle. This port acts as an A-device.
ADP	Attach Detection Protocol. A protocol which enables an OTG device or EH to detect when a remote device has been attached or detached (see [USBOTG&EHv2.0]).
ADP-capable	Device which is able to perform ADP probing and ADP sensing[1].
ADP probing	This enables the local A-device or B-device to probe VBUS and detect a change in attachment status.
ADP sensing	This enables the local B-device to detect ADP probing generated by an attached device. ADP sensing is not a requirement for A-devices.
Application	A generic term referring to any software that is running on a device that can control the behavior or actions of the USB port(s) on a device.
Attach	This specification makes a distinction between the words “attach” and “connect”. A downstream device is considered to be attached to an upstream port when there is a physical cable between the two.
A-UUT	Unit Under Test with a Micro-A plug attached.
B-Device	Device with: • a Standard-B receptacle or, • Mini-B receptacle, or • Micro-B receptacle, or • Micro-AB receptacle with either a Micro-B plug or no plug inserted into its receptacle, or • a captive cable ending in a Standard-A or Micro-A plug. The B-device is a peripheral at the start of a session. If the B-device is On-The-Go (equipped with a Micro-AB receptacle), it may be granted the role of host from an On-The-Go A-device (see [USBOTG&EHv2.0]).
B-Host	B-device acting in host role
B-Peripheral	B-device acting in peripheral role
B-Port	USB port with a B plug inserted into its receptacle. This port acts as a

[1] An ADP-capable EH is not required to do ADP sensing since it is not able to operate in the B-device position.

	B-device.
B-UUT	Unit Under Test with a Micro-B plug attached.
Connect	This specification makes a distinction between the words “attach” and “connect”. A downstream device is considered to be connected to an upstream port when it is attached to the upstream port, and when the downstream device has pulled either the D+ or D- data line high through a 1.5 kΩ resistor, in order to enter low-speed, full-speed or high-speed signaling.
EH	Embedded Host.
Embedded Host	A product that has a Standard-A or Micro-AB receptacle supported by a USB Host Controller. Embedded Hosts have a particular set of targeted peripherals, as described in their TPL.
FS	Full Speed (as defined in [USB2.0]).
HS	High Speed (as defined in [USB2.0]).
Host	A physical entity that is attached to a USB cable and is acting in the role of the USB host as defined in [USB2.0]. This entity initiates all data transactions and provides periodic Start of Frames (SOF’s).
HNP	Host Negotiation Protocol (see [USBOTG&EHv2.0]).
ID	Identification. Denotes the pin on the Micro connectors that is used to differentiate a Micro-A plug (ID pin is FALSE) from a Micro-B plug (ID pin is TRUE). See [Micro-USB1.01] for details.
LPM	Link Power Management (as defined in [USB2.0]).
LS	Low Speed (as defined in [USB2.0]).
OTG	On-The-Go.
OTG device	Device that provides both host and peripheral capabilities over a single Micro-AB receptacle, as outlined in [USBOTG&EHv2.0].
Peripheral	A physical entity that is attached to a USB cable and is currently operating as a “device” as defined in [USB2.0]. The peripheral responds to low level bus requests from the host.
Peripheral-only B-device	A device with a compliant B-side connector which can act only in peripheral mode.
PET	Protocol and Electrical Tester. A test unit which is capable of performing the tests specified in Section 6.
Pre-session Calibration	ADP probe measurement taken when a pre-session measurement is not available. In this case, a measurement is taken, and a new session is initiated (or requested) to determine whether a remote device is attached.
SE0	Single Ended Zero (as defined in [USB2.0]).
Session	The period of time that VBUS is powered (see [USBOTG&EHv2.0]).
SOF	Start of Frame (as defined in [USB2.0]).
SRP	Session Request Protocol (see Section [USBOTG&EHv2.0]).
SRP-capable	Device which is able to generate or respond to SRP signaling.
Targeted Host	A host that is only required to support the peripherals on its Targeted Peripheral List. OTG devices and Embedded Hosts both have

	Targeted Host functionality.
Targeted Peripheral List	A list of USB peripherals that a particular Targeted Host can support (see [USBOTG&EHv2.0]).
TPL	Targeted Peripheral List.
USB	Universal Serial Bus.
USB-IF	USB Implementers Forum (See www.usb.org).
UUT	Unit Under Test

3 Executive Summary

The “USB On-The-Go and Embedded Host Automated Compliance Plan” does not overlap the USB 2.0 peripheral compliance plan. Any parameter/feature specified in the USB 2.0 Specification will not be tested here. The “USB On-The-Go and Embedded Host Automated Compliance Plan” will test only “New” parameters/features that are specified in [USBOTG&EHv2.0].

The significant features tested from [USBOTG&EHv2.0] are:

- A Targeted Host capability
- Session Request Protocol
- Attach Detection Protocol
- Host Negotiation Protocol
- The ability to source at least 8 mA on V_{BUS}
- A means of communicating with the user
- No Silent failures – *i.e.* there must be a method of alerting the user that an unsupported device has been attached, or that the attached device violates one of the conditions required to interface to the OTG device, *e.g.* it requires more current than the OTG device can provide.
- Interoperability with devices on the Targeted Peripheral List defined for the UUT.
- The details of these and other compliance tests are covered in subsequent sections of this document.

Many tests are based on the use of the Protocol and Electrical Tester (PET) as specified in [PET].

The USB-IF Board reserves the right to re-certify products if, after USB-IF certification, the TPL is updated such that this adds new capability to the device which has not previously been tested.

4 Submission Materials

4.1 Checklists

The manufacturer of an Embedded Host, OTG device or SRP capable peripheral shall provide a completed [USBOTG&EHChecklist] checklist plus any required additional USB Checklists depending on the type of product to be tested,

The [USBSystemsChecklist] (product and/or silicon) is required for an OTG device or EH. EHs with B-ports, OTG devices and peripherals supporting SRP/ADP (product and/or silicon) must also pass all standard USB-IF peripheral testing and so are required to supply a [USBPeripheralChecklist] and also a [USBPeripheralSilicon] when silicon is not yet certified.

4.2 Targeted Peripheral Lists

Targeted Hosts (both OTG devices and EHs) must provide Targeted Peripheral Lists before submitting the device for OTG and EH testing (see [USBOTG&EHChecklist]). The TPL shall include the list of supported products and hubs.

4.3 Device Specific Procedures

Testing in the absence of support for the automated test mechanisms specified in Section 5.1 is out of the scope of this compliance plan. The recommended approach to testing is to support these test mechanisms and to use the PET.

4.4 Interoperability Testing

The following sections detail the submissions which are required in order to complete Interoperability testing as defined in Section 7.

4.4.1 Functional definition

The A-UUT vendor is responsible for providing details of the expected functionality of the A-UUT.

4.4.2 TPL device(s)

The A-UUT vendor is responsible for providing the following TPL devices:

- Each device listed on the TPL shall be provided.
- When product is an EH with multiple ports 2 identical devices shall be provided.
- When the product is an OTG device which supports hubs then 2 identical devices shall be provided as well as the hub or hubs listed on the TPL.
- When the product is an OTG device which lists itself on the TPL2 identical products shall be provided.

All the listed TPL devices should be retail and USB-IF certified

4.4.3 Suspend support

The A-UUT vendor is responsible for providing the following details relating to suspend:

- When the A-UUT supports USB suspend features (including LPM) there shall be an option to force the A-UUT in suspend during normal function in order to prove the suspend tests.
- When remote wakeup is supported the A-UUT shall provide an option to enable this feature during suspend.

In case more types of suspend are supported the A-UUT shall be able to enter each suspend mode manually.

5 OTG device support for the automated tester

5.1 Automated Testability Requirements

An OTG A-device or B-device needs to behave in certain ways to assist with testing. [USBOTG&EHv2.0] allows immense freedom of behavior to devices which are covered by the specification, which could be a major barrier to automated testing, or even any testing at all of some particular parts of the specification.

In order for an OTG device or EH to be testable by automated equipment, a number of behavioral items must be satisfied. These can each be guaranteed by one of two approaches.

1) The behavior required is a normal part of device operation

2) The behavior required is forced by a special test mode

Details of the required automated test features are given in [USBOTG&EHv2.0].These behavioral requirements also apply to retail products obtained “off the shelf” since USB-IF retains the right to re-test any USB-IF certified shipping products at their point of sale.

6 PET Automated Tests

The tests in this section test only a partial list of all the possible parameters and compliant behavior. The tests should not be considered as a full validation test plan. It is the responsibility of the manufacturer of a device to verify compliance of their products according to [USBOTG&EHv2.0].

6.1 PET – Protocol and Electrical Tester

The PET is a unit, designed to perform compliance testing or assist with development work leading towards compliance testing on On-the-Go, Battery Charging and other general USB applications. It is described in detail in [PET].

A brief breakdown of its functional blocks follows.

6.1.1 Serial Interface Engine (SIE)

A fully functional SIE, with both host and peripheral capabilities, connected via a PHY to the PET socket labeled UUT (Micro-AB receptacle on the front panel). This is under the control of the Script Processor.

6.1.2 Electrical Test Board (ETB)

This contains circuitry to allow control and measurement of the electrical parameters for [USB2.0], [USBOTG&EHv2.0] and [BatteryCharging1.2]. It includes V_{BUS} Generator, ID pin circuitry, data line test mode circuitry, V_{BUS} current and voltage loads, and a variety of voltage and current measuring blocks. Extra connections are provided to enable the testing of Accessory Charger Adapters (ACAs).

6.1.3 Script Processor

Scripts are downloaded to this processor to control the sequence of operations required for a particular test. The processor controls the SIE and ETB as required by the operator. Scripts for all the [USBOTG&EHv2.0] and [BatteryCharging1.2] compliance tests would be provided by the application accompanying the PET.

6.1.4 USB Analyzer

The PET could also provide full USB analyzer functionality. By designing the analyzer into the PET circuitry the analyzer could be designed to have zero impact on the data line transmission quality.

6.2 Test Cables Required

The cables required by the PET tester are described below.

Each cable should be labeled, and specify the lead loop resistance value, required to be entered into the test dialog, if the cable is replaced. The tester application contains a check box to specify whether the UUT has a captive cable, as in this case the captive test cable is deemed to be part of the unit under test.

6.2.1 Special Test Cable A

Table 6-1 Special Test Cable A

Micro-B plug to Micro-B plug		
Micro-B plug (PET)	**Micro-B plug (UUT)**	**Purpose**
1	1	VBUS
2	2	D-
3	3	D+
4	4	ID
5	5	GND

This cable has been specified to allow control of the ID pin of the unit-under-test. It is important to use this cable when the test specifies it. The cable has the following requirements:

- The combined resistance of the Ground and the VBUS conductors (including all four connector contact resistances) shall be accurately measured at 500mA, and marked on the cable, so that its value may be entered into the PET test dialog.
- The resistance of the Ground conductor (including both connector contact resistances) shall not exceed ROTG_ACA_GND (100mΩ) [BatteryCharging1.2].
- The shield shall not be connected to the ground within the cable.

6.2.2 Special Test Cable B

Table 6-2 Special Test Cable B

Micro-B plug to Standard-A plug		
Micro-B plug (PET)	**Standard-A plug (UUT)**	**Purpose**
1	1	VBUS
2	2	D-
3	3	D+
nc		
5	4	GND

Although this is a standard cable configuration, the cable has the following requirements:

- The combined resistance of the Ground and the VBUS conductors (including all four connector contact resistances) shall be accurately measured at 500mA, and marked on the cable, so that its value may be entered into the PET test dialog.
- The shield shall not be connected to the ground within the cable.

6.3 Test Set Ups

6.3.1 OTG device as Unit-Under-Test (Setup no. 1)

When running a test-suite relating to an OTG device, the first test will prompt you to attach it to the PET using ‘Special Cable A’. This ***Micro-B plug*** to ***Micro-B plug*** cable is provided with

the PET unit and it is essential that a cable as specified above is used, for the following reasons:

- It has 5 cores, instead of the usual 4. This allows the PET to control the ID pin of the UUT.
- The resistance of this cable can be allowed for in tests involving large VBUS currents with measurements on VBUS current and voltage.

Figure 6-1 Setup No 1 – OTG device

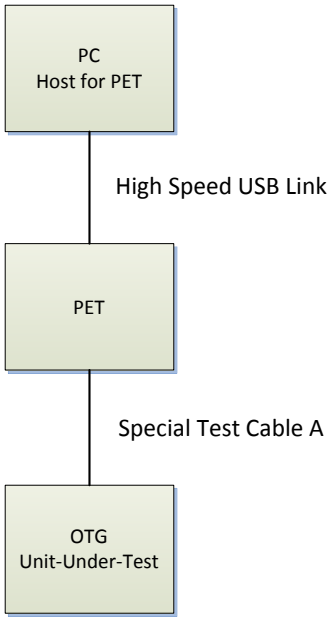

6.3.2 Embedded Host as Unit-Under-Test (Setup no. 2)

When running a test-suite relating to an Embedded Host using a Standard-A receptacle, the first test will prompt you to attach it to the PET using 'Special Cable B'. This ***Micro-B plug*** to ***Standard-A plug*** cable is provided with the PET unit and it is essential that a cable as specified above is used, for the following reason:

- The resistance of this cable can be allowed for in tests involving large VBUS currents with measurements on VBUS current and voltage.

When running a test-suite relating to an Embedded Host using a Micro-AB receptacle, the first test will prompt you to attach it to the PET using 'Special Cable A'. This ***Micro-B plug*** to ***Micro-B plug*** cable is provided with the PET unit and it is essential that a cable as specified above is used, for the following reasons:

- It has 5 cores, instead of the usual 4. This allows the PET to control the ID pin of the UUT.
- The resistance of this cable can be allowed for in tests involving large VBUS currents with measurements on VBUS current and voltage.

Figure 6-2 Setup No 2 – Embedded Host

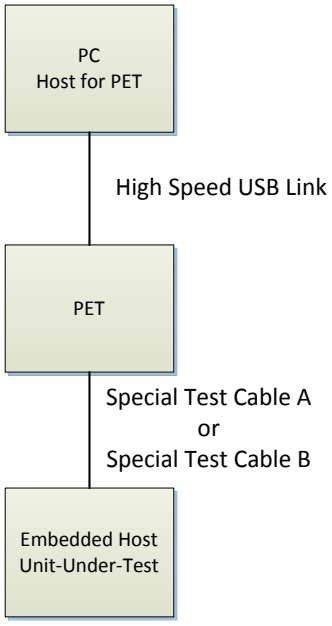

6.3.3 Peripheral Only as Unit-Under-Test (Setup no. 3)

When running a test-suite relating to a Peripheral-Only OTG device, the first test will prompt you to attach it to the PET using 'Special Cable A'. This ***Micro-B plug*** to ***Micro-B plug*** cable is provided with the PET unit and it is essential that a cable as specified above is used, for the following reason:

- The resistance of this cable can be allowed for in tests involving large VBUS currents with measurements on VBUS current and voltage.

Another possibility is that the device has a captive cable with a **Micro-A plug**. In this case use this, and check the 'Captive Cable' check box, in the 'PET Test Suites' Dialog.

Finally, the device may have a captive cable with a **Standard-A plug**. In this case, use a suitable adapter to attach the **Standard-A plug** to the Micro-AB receptacle of the PET, and check the 'Captive Cable' check box, in the 'PET Test Suites' Dialog. The PET will apply any relevant VBUS test at the point of connection to the UUT, which means that the the UUT will be required to continue to function at VB_VBUS min (4V) at its connector, in spite of the extra voltage drop in its own cable.

Figure 6-3 Setup No 3 – Peripheral Only

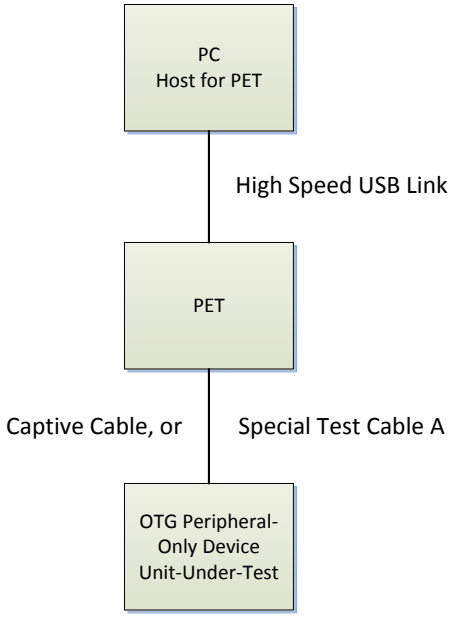

6.4 User Input Before Test Runs

Before running any test suite, the PET needs to be informed of a number of parameters by the test operator. Most of the information should be available from the Checklist supplied by the vendor. The following tables describe the information required. Typically, PET software would modify the available options to those applying to the currently chosen device type.

Table 6-3: Information Obtained From Checklist

Input	Type	Purpose	Checklist Ref
OTG Device	Mutually exclusive check boxes	Automatically selected by UUT items OTG-A or OTG-B.	PI2
Embedded Host		Automatically selected by UUT item Embedded Host.	
Peripheral Only		Automatically selected by UUT item Embedded Host.	
Uses Micro-AB	Check Box	Check this box for an EH which uses a Micro-AB receptacle instead of a Standard-A receptacle. It will be automatically selected for OTG devices.	PI5a
Supports Sessions	Check box	Check this box if the OTG A-UUT or EH with Micro-AB receptacle does not keep V_{BUS} enabled all the time that the ID pin is held low. Check this box for an EH with Standard-A receptacle which does not keep V_{BUS} high all the time it is powered up. In either case it is assumed that SRP or ADP is available to detect the presence of a device.	PI10
SRP as A-device	Check box	Check this box if the UUT, as an A-device, supports detecting, and acting on, an SRP pulse generated by a connected device.	PI13
HNP as A-device	Check box	Check this box if the UUT, as an A-device, supports HNP to enable the connected B-device to become host if it so requires.	PI13
HNP Polling as A-device	Check box	Check this box if the UUT, as an A-device, supports HNP polling. If it does it is allowed to remain as host, for as long as the other device does not set its Host Request Flag.	PI13
ADP as A-device	Check	Check this box if the UUT, as an A-device, supports ADP probing	PI13

	box	to detect the presence or otherwise of a connected device.	
SRP as B-device	Check box	Check this box if the UUT, as a B-device, supports generating an SRP pulse in order to start a session (cause the connected A-device to turn on V_{BUS}).	PI20
HNP as B-device	Check box	Check this box if the UUT, as an B-device, supports HNP to allow it to become host if it so requires.	PI20
ADP as B-device	Check box	Check this box if the UUT, as an B-device, supports ADP sensing and probing to detect the presence or otherwise of a connected device.	PI20
FS Not Available	Check box	Check this box if UUT does not fully support full-speed operation. This is not permitted for an OTG device, but may be for an Embedded Host.	PI11, PI18
$I_{A\_VBUS\_RATED}$	Edit box	The rated output current of an A-device in mA units.	PI8
bMaxPower	Edit box	bMaxPower (sic) is the highest current, in mA, declared in any of the device's Configuration Descriptors. This value ignores current drawn under the Battery Charging provisions.	PI17
T_{PWRUP_RDY}	Edit box	Maximum time, in seconds, specified by vendor from powering on the UUT until it is ready to perform USB functionality. By default this is set to 30 seconds, but a vendor is permitted to specify a longer time.	PI24
$T_{A\_WAIT\_BCON}$ max	Edit box	The maximum time, in seconds, that V_{BUS} is left on for by an A-device, in the absence of a B-device connecting. The default value is thirty seconds. A vendor is permitted to specify a longer time, but should be aware that this will have an impact on the time taken for, and therefore possibly the cost of, compliance testing.	PI10
Unknown Dev (No HNP)	Edit boxes	The test will use the VID/PID combination specified during tests for error messages, when an unknown B-device, not capable of HNP, is connected. A default value (1A0A/0201) is used, but any other device not on the UUT's TPL may be defined here.	-
Unknown Dev (HNP)	Edit boxes	The test will use the VID/PID combination specified during tests for error messages, when an unknown B-device, capable of HNP, is connected. A default value (1A0A/0202) is used, but any other device not on the UUT's TPL may be defined here.	-

Table 6-4: Information Required by PET to Compensate for Test Cables

Input	Type	Purpose
Cable A	Edit box	Test Cable A loop resistance in mΩ.
Cable B	Edit box	Test Cable B loop resistance in mΩ.

6.5 Pass Criteria

In the some of the test sequences which follow, a particular form of wording has been used, to ensure that the pass criteria are clear. Wherever the word 'check' is used, this defines a timing or behavior requirement that must be satisfied for the overall test sequence to be deemed to have been passed. The failure to satisfy any one of these 'checks' results in a failure for the test sequence in question.

For example, in the following test sequence fragment, two pass criteria are implicitly defined by use of the word 'check'. Failure of either one results in a failure for the complete test sequence.

...

7. Check for V_{BUS} on within T_{PWRUP_RDY} (30s)

8. Check it remains on for **TA_WAIT_BCON** min (1.1s)

...

In tests where there is some interaction required from the operator in order to validate a test pass then a specific pass criterion is listed at the start of the test. In the example:

…

7. Display Message "Click OK if 'Unsupported Device' indication displayed on UUT".
8. If operator clicks OK before 30s timer expires, then UUT passes test.

…

The pass criterion would be "Message "Unsupported Device" or similar is displayed on UUT".

6.6 Parameter v Test Identifier

Table 6-5 identifies which test procedure(s) result in each of the parameters specified in [USBOTG&EHv2.0] being tested. Not all parameters can be directly measured.

Table 6-5: Which test procedures test which parameters

Parameter	Symbol	Tested In	Comments
VBUS Voltage:			
VBUS Average Voltage (low power)	**VA_VBUS_AVG_LO**	A-UUT VBUS	Both min and max tested.
VBUS Average Voltage (high power)	**VA_VBUS_AVG_HI**	A-UUT VBUS	Both min and max tested.
VBUS transient voltage (low power)	**VA_VBUS_TRNS_LO**	A-UUT VBUS	Both min and max tested.
VBUS transient voltage (high power)	**VA_VBUS_TRNS_HI**	A-UUT VBUS	Both min and max tested.
B-device operating voltage	**VB_VBUS**	B-UUT VBUS	Both min and max tested.
OTG device or EH Leakage Voltage	**VOTG_VBUS_LKG**	A-UUT SRP B-UUT SRP	Only has a max. This is tested.
ADP discharge voltage	**VADP_DSCHG**	A-UUT ADP B-UUT ADP	Only has a max. This is tested.
VBUS noise requirement for ADP	**VADP_NOISE**	-	Not Tested. (Checked by confirmation of correct operation.)
VBUS Current:			
A-device Output Current	**IA_VBUS_OUT** **IA_VBUS_RATED**	A-UUT VBUS	The value which is actually tested is **IA_VBUS_RATED** which is specified by the vendor to be less than or equal to **IA_VBUS_OUT** max, and greater than or equal to the larger of **IA_VBUS_OUT** min and **bMaxPower** (part of the bmAttributes field of the Standard Configuration Descriptor as defined in [USB2.0] or [USB 3.0]) of any peripheral on the TPL of the UUT. The PET limits the maximum value of **IA_VBUS_RATED** to 1.8A to avoid damage to USB connectors.
B-device (OTG device or SRP-	**IB_UNCFG**	B-UUT VBUS	Only has a max. This is tested.

Parameter	Symbol	Tested In	Comments
capable peripheral-only) Unconfigured Average Current			
VBUS leakage source current	**IVBUS_LKG_SRC**	A-UUT LKG	Only has a max. This is tested.
ADP source current	**IADP_SRC**	A-UUT ADP B-UUT ADP	Both min and max tested.
ADP sink current	**IADP_SINK**	-	Not measured. However its effect is proved by the measurement of **VADP_DSCHG**
Terminations:			
VBUS resistance	**ROTG_VBUS**	A-UUT LKG B-UUT LKG	Only has a min. This is tested.
Thresholds:			
OTG device Session Valid	**VOTG_SESS_VLD**	B-UUT VBUS	Both min and max tested
ADP probing voltage	**VADP_PRB**	A-UUT ADP B-UUT ADP	Both min and max tested
ADP sensing voltage	**VADP_SNS**	-	Not directly measurable.
Capacitance:			
OTG A-device or EH VBUS bypass capacitance	**CA_VBUS**	A-UUT CAP	Min is tested.
VBUS bypass capacitance for ADP capable devices	**CADP_VBUS**	A-UUT CAP B-UUT CAP	Both min and max tested
ADP threshold capacitance	**CADP_THR**	A-UUT ADP B-UUT ADP	Both min and max tested
VBUS bypass capacitance for non-ADP capable devices	**CRPB**	B-UUT CAP	Both min and max tested
DC Electrical Timing:			
Period of measurement for **VA_VBUS_AVG_LO** and **VA_VBUS_AVG_HI**	**TAVG_VBUS**	-	Not a parameter to measure, but a specification for performing a measurement. Used in A-UUT VBUS Used in B-UUT VBUS
VBUS Rise Time	**TA_VBUS_RISE**	A-UUT VBUS (in A-UUT GVBO)	Only has a max. This is tested.
Session end to **VOTG_VBUS_LKG**	**TSSEND_LKG**	A-UUT LKG B-UUT SRP A-ST-TRANS	Only has a max. This is tested.
Time to detect device attachment and turn on VBUS	**TA_VBUS_ATT**	A-UUT ADP (in A-UUT GVBO) and A-ST-TRANS A-UUT ADP -	Only has a max. Case 1: Non ADP – ID pin goes FALSE. VBUS turn on within **TA_VBUS_ATT** Case 2: ADP capable – capacitance change. VBUS turn on within **TA_VBUS_ATT** Case 3: ADP Startup. VBUS on after an initial ADP probe. Not testable as ADP probe cannot be

Parameter	Symbol	Tested In	Comments
			detected when immediately followed by V_{BUS} on.
Common:			
Local Disconnect to Data Line Discharge	**T_{LDIS_DSCHG}**	-	Not directly measurable
ADP cycle to cycle jitter	**$T_{ADP\_PRB\_JTR}$**	A-UUT ADP B-UUT ADP	Only has a max. This is tested.
Power on until ready for USB (not mandatory see reference)	**T_{PWRUP_RDY}**	A-UUT PUT B-UUT PUT	Only has a max. This is tested.
A-device:			
SRP Response Time	**$T_{A\_SRP\_RSPNS}$**	A-UUT SRP	Only has a max. This is tested.
B-Connect Long Debounce	**$T_{A\_BCON\_LDB}$**	A-UUT SRP	Only has a min. This is tested.
B-connect to A-reset	**$T_{A\_BCON\_ARST}$**	A-UUT HNP	Only has a max. This is tested.
Wait for B-Connect	**$T_{A\_WAIT\_BCON}$**	A-UUT VBUS	Max value used in many places to infer when a test has failed. Min value tested in test indicated
A-Idle to B-Disconnect	**$T_{A\_AIDL\_BDIS}$**	A-UUT HNP	Only has a min. This is tested.
B-Disconnect to A-Connect	**$T_{A\_BDIS\_ACON}$**	A-UUT HNP	Only has a max. This is tested. Also used in B-UUT.
B-Idle to A-Disconnect	**$T_{A\_BIDL\_ADIS}$**	A-UUT HNP	Both min and max tested.
B-Connect Short Debounce	**$T_{A\_BCON\_SDB}$**	-	Internal to A-device. Cannot be measured.
B-Connect Short Debounce Window	**$T_{A\_BCON\_SDB\_WIN}$**	-	Internal to A-device. Cannot be measured.
A-device ADP probing period, (Typical = 1.75s)	**$T_{A\_ADP\_PRB}$**	A-UUT ADP	Both min and max tested.
Session end to ADP probing	**$T_{A\_SSEND\_PRB}$**	A-UUT PUT A-UUT ADP	Only has a max. This is tested.
B-device:			
Session end to SRP init	**$T_{B\_SSEND\_SRP}$**	B-UUT SRP	Only has a min. This is tested.
SE0 Time Before SRP	**$T_{B\_SE0\_SRP}$**	B-UUT SRP	Only has a min. This is tested.
Data-Line Pulse Time	**$T_{B\_DATA\_PLS}$**	A-UUT SRP B-UUT SRP	Both min and max tested.
SRP Fail Time	**$T_{B\_SRP\_FAIL}$**	B-UUT PUT B-UUT SRP B-UUT DNR	Min tested in B-UUT PUT and B-UUT SRP. Max functionally tested in B-UUT DNR.
Session Valid to B-Connect	**$T_{B\_SVLD\_BCON}$**	B-UUT SRP	Only has a max. This is tested.
A-Idle to B-Disconnect	**$T_{B\_AIDL\_BDIS}$**	B-UUT HNP	Both min and max tested.
Time between B-device HS to FS transition during suspend, and B-	**$T_{B\_FS\_BDIS}$**	B-UUT HNP	Both min and max tested.

Parameter	Symbol	Tested In	Comments
device disconnect			
A-SE0 to B-Reset	**$T_{B\_ASE0\_BRST}$**	-	Time to optional event – not tested.
A-Connect Debounce	**$T_{B\_ACON\_DBNC}$**	-	Not a practical test – check by vendor declaration.
A-Connect to B-SE0	**$T_{B\_ACON\_BSE0}$**	B-UUT HNP	Only has a max. This is tested.
B-device ADP probing period (Typical = 2.0s)	**$T_{B\_ADP\_PRB}$**	B-UUT PUT B-UUT ADP	Both min and max tested.
Time from stopping ADP probing to SRP generation	**$T_{B\_ADP\_PRB\_SRP}$**	B-UUT ADP	Only has a max. This is tested.
B-device ADP detach time, sensing mode	**$T_{B\_ADP\_DETACH}$**	B-UUT ADP	Both min and max tested.
Sensing end to first ADP probe	**$T_{B\_SNSEND\_PRB}$**	B-UUT ADP	Only has a max. Not independently testable, but tested in conjunction with **$T_{B\_ADP\_DETACH}$** max.
Testability			
Bus reset to configuring test device	**T_{TST_CONFIG}**	A-UUT V_{BUS} A-UUT SRP	Only has a max. This is tested.
Maintaining configured session on test device	**T_{TST_MAINT}**	-	Used to allow testing in A-UUT V_{BUS}.
B-device as host, SetConfiguration() to suspend of test device	**T_{TST_SUSP}**	B-UUT HNP	Only has a max. This is tested.
Session end to SRP from unit under test	**T_{TST_SRP}**	B-UUT SRP	Only has a max. This is tested.
'otg_hnp_reqd' flag set to Host Request Flag set	**T_{TST_HNP}**	B-UUT HNP	Only has a max. This is tested.
Reconnect after handing back control from HNP caused by '**'otg_hnp_reqd**'	**T_{TST_HNPEND}**	B-UUT HNP	Only has a max. This is tested.
Time to switch off V_{BUS} after tester disconnects with '**otg_vbus_off**'set	**T_{TST_VBOFF}**	A-UUT CAP	Only has a max. This is tested.
V_{BUS} off with no ADP after session which sets '**otg_vbus_off**'	**T_{TST_NOADP}**	-	Min used to allow testing in A-UUT CAP.
HNP Polling			
Polling period for the event flags	**$T_{HOST\_REQ\_POLL}$**	A-UUT HNP	Both min and max tested.
Time from detection of host flag until suspend	**$T_{HOST\_REQ\_SUSP}$**	A-UUT HNP	Both min and max tested.

Table 6-6: Guide to abbreviations used in Table 6-5

Abbreviated Name	Full Name
A-UUT GVBO	Get VBUS On Function
A-UUT PUT	A-UUT Initial Power Up Tests
A-UUT VBUS	A-UUT VBUS Voltage and Current Measurements
A-UUT CAP	A-UUT Bypass Capacitance
A-UUT SRP	A-UUT Session Request Protocol
A-UUT HNP	A-UUT Host Negotiation Protocol
A-UUT ADP	A-UUT Attach Detection Protocol
A-UUT LKG	A-UUT Leakage
A-ST-TRANS	Appropriate A-UUT State Transition Test
B-UUT PUT	B-UUT Initial Power Up Tests
B-UUT VBUS	B-UUT VBUS Voltage and Current Measurements
B-UUT CAP	B-UUT Bypass Capacitance
B-UUT SRP	B-UUT Session Request Protocol
B-UUT HNP	B-UUT Host Negotiation Protocol
B-UUT ADP	B-UUT Attach Detection Protocol
B-UUT LKG	B-UUT Leakage
B-UUT DNR	B-UUT “Device No Response”

6.7 A-UUT Tests

6.7.1 ‘Get VBUS Turned On’ Sequence used in A-UUT Test Sequences

The following sequences are used in most of the A-UUT tests, to bring the UUT to the point of applying VBUS. As the test sequences themselves are tests of functions which can be required on more than one UUT type, it is necessary to use different procedures, depending on the capabilities of the UUT in question. The procedure depends on whether the UUT is:

- OTG A-device which supports sessions and is capable of ADP and SRP
- OTG A-device which supports sessions and is capable of ADP but not SRP
- OTG A-device which supports sessions, is capable of SRP but not ADP
- OTG A-device which does not support sessions
- EH which supports sessions and is capable of ADP and SRP
- EH which supports sessions and is capable of ADP but not SRP
- EH which supports sessions and is capable of SRP but not ADP
- EH which does not support sessions

In the actual tests, these sequences are indicated by: ‘Get VBUS Turned On’

At the start of most A-UUT tests, the main aim is to get VBUS on as soon as possible. One of the main potential delays in performing A-UUT tests originates with **TA_WAIT_BCON** max, which can mean waiting 30s or more between tests for VBUS to go off, so that we can turn it on, knowing that it will then stay on for at least **TA_WAIT_BCON** min (1.1 Sec).

The alternative approach we use in the following A-UUT test sequences is to observe at the start of a test whether VBUS is already on (still on from the previous test). If not, we invoke the 'Get VBUS Turned On' sequence. Otherwise, we proceed with the next step, which is to connect. After connecting we check whether VBUS is still on. If it is we proceed with the test, otherwise we disconnect D+, invoke the 'Get VBUS Turned On' sequence, and then connect again. To avoid an infinite loop, we restrict the use of 'Get VBUS Turned On' to one attempt.

Note that for simplicity, this procedure is not described in detail in the A-UUT tests.

In general, the tests can now proceed without delay in between tests.

An important point to note is that VBUS may stay on for two different possible times. If the test device 0x1A0A/0x0200 is enumerated then it will stay on for **TTST_MAINT** from being configured. If another device is enumerated, or the device disconnects before enumeration, then VBUS stays on for **TA_WAIT_BCON**. In all cases where **TTST_MAINT** is relevant then we must wait for this time to expire before ending the test, as behavior resulting from disconnecting and reconnecting during **TTST_MAINT** is undefined.

6.7.1.1 For OTG A-device UUT which supports sessions and is capable of ADP and SRP For EH UUT which supports sessions, and is capable of ADP and SRP

GVbO1. UUT is powered up. The PET has **CRPB** max (10µF), and a pull-down resistor of **ROTG_VBUS** min (10kΩ) on VBUS, representing a typical device, with the data lines not pulled up. If OTG A-device UUT, then ID pin is connected to ground.

GVbO2. Check that VBUS is below **VOTG_SESS_VLD** min within **TA_WAIT_BCON** max (30s, or as specified by vendor). Wait only until it has stayed below **VOTG_SESS_VLD** min, for 5s. This ensures that there will be no further session resulting from an unexpected VBUS capacitance change, and also that we meet **TB_SSEND_SRP** min (1.5s).

GVbO3. Wait for a further ADP probe to be completed. This is to minimize the possibility of the turning on of VBUS corrupting an ADP probe value.

GVbO4. PET applies SRP pulse on D+, of **TB_DATA_PLS** (5ms to 10ms – use mid-range value 7.5ms).

GVbO5. Check that VBUS rises above **VOTG_SESS_VLD** min within **TA_SRP_RSPNS** max (4.9s).

GVbO6. Check that VBUS rises to at least **VA_VBUS_AVG_LO** min (4.4V) within **TA_VBUS_RISE** (100ms) of VBUS rising above **VOTG_SESS_VLD** min.

6.7.1.2 For OTG A-device UUT which supports sessions and is capable of SRP but not ADP

GVbO1. UUT is powered up. The PET has **CRPB** max (10µF), and a pull-down resistor of **ROTG_VBUS** min (10kΩ) on VBUS, representing a typical device, with the data lines not pulled up.ID pin is connected to ground.

GVbO2. Disconnect ID pin from ground.

GVbO3. Wait 5s.

GVbO4. Check VBUS is below **VOTG_SESS_VLD** min.

GVbO5. Connect ID pin to ground.

GVbO6. Check that VBUS rises above **VOTG_SESS_VLD** min within **TA_VBUS_ATT** max (200ms).

GVbO7. Check that VBUS rises to at least **VA_VBUS_AVG_LO** min (4.4V) within **TA_VBUS_RISE** (100ms) of VBUS rising above **VOTG_SESS_VLD** min.

6.7.1.3 For EH UUT which supports sessions and is capable of SRP but not ADP

GVbO1. UUT is powered. The PET has **CRPB** max (10µF), and a pull-down resistor of **ROTG_VBUS** min (10kΩ) on VBUS, representing a typical device, with the data lines not pulled up.

GVbO2. Check that VBUS is below **VOTG_SESS_VLD** min within **TA_WAIT_BCON** max (30s, or as specified by vendor). Wait only until it has stayed below **VOTG_SESS_VLD** min, for 5s. This ensures that there will be no further session resulting from an unexpected VBUS capacitance change, and also that we meet **TB_SSEND_SRP** min (1.5s).

GVbO3. PET applies SRP pulse on D+, of **TB_DATA_PLS** (5ms to 10ms – use mid-range value 7.5ms).

GVbO4. Check that VBUS rises above **VOTG_SESS_VLD** min within **TA_SRP_RSPNS** max (4.9s).

GVbO5. Check that VBUS rises to at least **VA_VBUS_AVG_LO** min (4.4V) within **TA_VBUS_RISE**(100ms) of VBUS rising above **VOTG_SESS_VLD** min.

6.7.1.4 For EH UUT which does not support sessions

GVbO1. UUT is powered up. The PET has **CRPB** max (10µF), and a pull-down resistor of **ROTG_VBUS** min (10kΩ) on VBUS, representing a typical device, with the data lines not pulled up.

GVbO2. Check that VBUS is above **VA_VBUS_AVG_LO** min (4.4V).

6.7.1.5 For OTG A-device UUT which does not support sessions

GVbO1. UUT is powered up. The PET has **CRPB** max (10µF), and a pull-down resistor of **ROTG_VBUS** min (10kΩ) on VBUS, representing a typical device, with the data lines not pulled up. ID pin is connected to ground.

GVbO2. Check that VBUS is above **VA_VBUS_AVG_LO** min (4.4V).

6.7.1.6 For OTG A-device UUT which supports sessions and is capable of ADP but not SRP

For EH UUT which supports sessions, and is capable of ADP but not SRP

GVbO1. UUT is powered up. The PET has **CRPB** max (10µF), and a pull-down resistor of **ROTG_VBUS** min (10kΩ) on VBUS, representing a typical device, with the data lines not pulled up. If OTG A-device UUT, then ID pin is connected to ground.

GVbO2. Check that VBUS is below **VOTG_SESS_VLD** min within **TA_WAIT_BCON** max (30s, or as specified by vendor). Wait only until it has stayed below **VOTG_SESS_VLD** min, for 5s. This ensures that there will be no further session resulting from an unexpected VBUS capacitance change.

GVbO3. Wait for a further ADP probe to be completed. This is to minimize the possibility of the turning on of VBUS corrupting an ADP probe value.

GVbO4. PET disconnects the capacitance across VBUS.

GVbO5. Check that VBUS rises above **VOTG_SESS_VLD** max within **TA_ADP_PRB** + **TA_VBUS_ATT** (1.85s + 200 ms + margin = 2.1 s).

GVbO6. Check that VBUS is below **VOTG_SESS_VLD** min within **TA_WAIT_BCON** max (30s, or as specified by vendor). Wait only until it has stayed below **VOTG_SESS_VLD** min, for 5s. This ensures that there will be no further session resulting from an unexpected VBUS capacitance change.

GVbO7. Wait for a further ADP probe to be completed. This is to minimize the possibility of the turning on of VBUS corrupting an ADP probe value.

GVbO8. PET reconnects the **CRPB** max (10µF) across VBUS.

GVbO9. Check that VBUS rises above **VOTG_SESS_VLD** max within **TA_ADP_PRB** + **TA_VBUS_ATT** (1.85s + 200 ms + margin = 2.1 s).

GVbO10. Check that VBUS rises to at least **VA_VBUS_AVG_LO** min (4.4V) within **TA_VBUS_RISE** (100ms) of VBUS rising above **VOTG_SESS_VLD** min.

6.7.2 A-UUT Initial Power-up Test

Purpose	To ensure that the OTG A-device or EH has been powered up and is ready for the subsequent tests. All following tests assume that this test has been run first. In the case of an ADP capable host, this test also confirms functional startup sequence.
Applies to	All Targeted Hosts.
Description	This test will confirm that the correct cable has been attached, and arrange for the test operator to switch the UUT on. In the case of an ADP capable device, it will first get the UUT switched off. It will also confirm the commencement of ADP probing.
Test setup	Test setup 1 or 2 (see Section 6.3)
Preconditions	None.
Checklist	ADP4, ADP5, M4, SRP4, E6.

6.7.2.1 Test procedure

6.7.2.1.1 Part 1 - Common to All A-UUT Types

1. Information describing the UUT has been entered into the PET test dialog (see Section 6.4)
   The test sequence then followed depends on the UUT type

   - OTG A-device capable of ADP.
   - EH capable of ADP.
   - OTG A-device not capable of ADP, but supporting sessions.
   - OTG A-device which does not support sessions.
   - EH which supports sessions and is not capable of ADP (but must support SRP).
   - EH which does not support sessions.

6.7.2.1.2 Part 2 - For OTG A-device UUT capable of ADP

2. Operator: Ensure UUT attached using Special Test Cable A (Test setup 1 Section 6.3.1).
3. UUT is either powered or is not powered, no capacitive or current loading on V_{BUS} and data lines not pulled up, ID pin not connected to ground.
4. Operator: Turn UUT off, if not already off.
5. Connect ID pin to ground.
6. Apply 10µF bypass capacitor, and 10kΩ pull-down resistor, to V_{BUS}.
7. Operator: Turn UUT on.

Note: There should be an ADP probe first within T_{PWRUP_RDY} but it is not possible to rigorously detect this if V_{BUS} is turned on immediately after. So we will not require detection of the probe.

8. Check for V_{BUS} on within T_{PWRUP_RDY} (30s).
9. Check it remains on for $T_{A\_WAIT\_BCON}$ min (1.1s).
10. Check for V_{BUS} off within $T_{A\_WAIT\_BCON}$ max (30s, or as specified by vendor).
11. Check ADP probe occurs within $T_{A\_SSEND\_PRB}$ of V_{BUS} going below $V_{OTG\_SESS\_VLD}$ min (0.8V).

12. Check for 2 further ADP probes within 2 x **TA_ADP_PRB** max (2 x 1.85s + margin = 4s) of the previous probe.
13. Now ready for any other A-UUT test.

6.7.2.1.3 Part 2 - For EH UUT which supports sessions, and is capable of ADP

2. Operator: Ensure UUT attached using Special Test Cable B (Test Setup 2 Section 6.3.2).
3. UUT is either powered or is not powered, no capacitive or current loading on VBUS and data lines not pulled up.
4. Operator: Turn UUT off, if not already off.
5. Apply 10µF bypass capacitor, and 10kΩ pull-down resistor, to VBUS.
6. Operator: Turn UUT on.

Note: There should be an ADP probe first within **TPWRUP_RDY** but it is not possible to rigorously detect this if VBUS is turned on immediately after. So we will not require detection of the probe.

7. Check for VBUS on within **TPWRUP_RDY** (30s).
8. Check it remains on for **TA_WAIT_BCON** min (1.1s).
9. Check for VBUS off within **TA_WAIT_BCON** max (30s, or as specified by vendor).
10. Check ADP probe occurs within **TA_SSEND_PRB** of VBUS going below **VOTG_SESS_VLD**min (0.8V).
11. Check for 2 further ADP probes within 2 x **TA_ADP_PRB** max (2 x 1.85s + margin = 4s) of the previous probe.
12. Now ready for any other A-UUT test.

6.7.2.1.4 Part 2 - For OTG A-device UUT which is not capable of ADP but supports sessions

2. Operator: Ensure UUT attached using UUT-OTG plug of Special Test Cable A (Test Setup 1 Section 6.3.1).
3. UUT is either powered or is not powered, no capacitive or current loading on VBUS and data lines not pulled up, ID pin not connected to ground.
4. Operator: Turn UUT off, if not already off.
5. Connect ID pin to ground.
6. Apply 10µF bypass capacitor, and 10kΩ pull-down resistor, to VBUS.
7. Operator: Turn UUT on.
8. Check for VBUS on within **TPWRUP_RDY** (30s).
9. Check it remains on for **TA_WAIT_BCON** min (1.1s).
10. Check for VBUS off within **TA_WAIT_BCON** max (30s, or as specified by vendor).
11. Now ready for any other A-UUT test.

6.7.2.1.5 Part 2 - For EH UUT which supports sessions and is not capable of ADP (therefore must support SRP)

2. Operator: Ensure UUT attached using Special Test Cable B (Test Setup 2 Section 6.3.2).
3. UUT is either powered or is not powered, no capacitive or current loading on VBUS and data lines not pulled up.
4. Apply 10µF bypass capacitor, and 10kΩ pull-down resistor, to VBUS.
5. Operator: Turn UUT on, if not already on.

6. If VBUS is on, go to step 9.
7. Perform SRP pulse.
8. Check if VBUS is on within **TA_SRP_RSPNS** max (4.9s) from rising edge of SRP pulse plus **TB_DATA_PLS** plus **TA_VBUS_RISE** (100ms) plus margin = 6s).
9. If not, repeat last two steps, for up to **TPWRUP_RDY**, until VBUS is on.
10. Connect using D+ pull-up.
11. Check for reset within **TPWRUP_RDY** from step 4.
12. Disconnect D+ pull-up.
13. Check VBUS remains on for **TA_WAIT_BCON** min (1.1s).
14. Wait further 2s to allow disconnection to be detected.
15. Now ready for any other A-UUT test.

6.7.2.1.6 Part 2 - For EH UUT which does not support sessions

2. Operator: Ensure UUT attached using Special Test Cable B (Test Setup 2 Section 6.3.2).
3. UUT is either powered or is not powered, no capacitive or current loading on VBUS and data lines not pulled up.
4. Operator: Turn UUT off, if not already off.
5. Apply 10µF bypass capacitor, and 10kΩ pull-down resistor, to VBUS.
6. Operator: Turn UUT on.
7. Check for VBUS on within **TPWRUP_RDY**.
8. Check that VBUS reaches **VA_VBUS_AVG_LO** min (4.4v) after **TA_VBUS_RISE** (100ms) of VBUS being at **VOTG_SESS_VLD** min.
9. Connect using D+ pull-up.
10. Check for reset within **TA_BCON_ARST** (30s) of D+ pull-up.
11. Disconnect D+ pull-up.
12. Now ready for any other A-UUT test.

6.7.2.1.7 Part 2 - For OTG A-device UUT which does not support sessions

2. Operator: Ensure UUT attached using Special Test Cable A (Test Setup 1 Section 6.3.1).
3. UUT is either powered or is not powered, no capacitive or current loading on VBUS and data lines not pulled up, ID pin not connected to ground.
4. Apply 10µF bypass capacitor, and 10kΩ pull-down resistor, to VBUS, and connect ID pin to ground.
5. Operator: Turn UUT on (if not already on).
6. Check for VBUS on within **TPWRUP_RDY**.
7. Connect using D+ pull-up.
8. Check for reset within **TA_BCON_ARST** (30s) of D+ pull-up.
9. Disconnect D+ pull-up.
10. Now ready for any other A-UUT test.

6.7.3 Following Tests

From now on all test sequences must start and finish with the PET having 10µF capacitance and 10kΩ pull-down resistance connected to VBUS, no termination on Data Lines, and holding the ID

pin connected to ground for OTG A-devices, but not for EHs. This allows the tests to be performed in any sequence.

6.7.4 A-UUT VBUS Voltage and Current Measurements

Purpose	To verify that the OTG A-device or EH can maintain voltage **VA_VBUS_OUT** while supplying its maximum rated output current.
Applies to	All Targeted Hosts
Description	This test will measure **VA_VBUS_AVG_LO** or **VA_VBUS_AVG_HI** as appropriate, using **TAVG_VBUS**, both off load and at **IA_VBUS_RATED**. It will ensure that **VA_VBUS_OUT** does not go outside the limits **VA_VBUS_TRNS_LO** or **VA_VBUS_TRNS_HI**.
Test setup	Test setup 1 or 2 (see Section 6.3)
Preconditions	For a battery powered A-UUT, the battery is fully charged. A-UUT Initial Power-up Test' has previously been run to establish the initial conditions for this test. It is expected that the value of **IA_VBUS_RATED** is known from **[USBOTG&EHChecklist]**. A capacitance of 10µF and a pull-down resistance of 10kΩ are connected across VBUS.
Checklist	E3, E4, E5, E6, T1, T2, T12, E9a

6.7.4.1 Test procedure

1. Information describing the UUT has been entered into the PET test dialog (see Section 6.4). This includes the value for **IA_VBUS_RATED**, which can be from 8mA to 5000mA, but must be greater than the **bMaxPower** (part of the bmAttributes field of the Standard Configuration Descriptor as defined in [USB2.0] or [USB 3.0]) of any peripheral on the TPL of the UUT.

Important: if **IA_VBUS_RATED** is over 1.8A, use the value 1.8A for **IA_VBUS_RATED** in the following tests, in order that the test does not damage the USB connectors.

If **IA_VBUS_RATED** is over 100mA, use **VA_VBUS_AVG_HI** and **VA_VBUS_TRNS_HI** where required below, else use **VA_VBUS_AVG_LO** and **VA_VBUS_TRNS_LO.**

6.7.4.1.1 Part 1 – For a UTT which supports sessions

2. Get VBUS turned on, using the method described in Section 6.7.1.
3. Wait for slightly less than **TA_WAIT_BCON** min. (1.1sec - 0.05 = 1.05sec) from point in time when VBUS reached **VA_VBUS_AVG_LO** min (4.4V).
4. Connect PET by using D+ pull-up.
5. From now on, continuously check that VBUS remains above **VA_VBUS_AVG_LO**.
6. Check that a bus reset (SE0) occurs within **TA_BCON_ARST** max (30s).
7. Check that UUT enumerates the PET successfully (up to setting configuration 1) within **TTST_CONFIG** max (30s) from end of reset. The PET responds as the test device (VID=0x1A0A, PID=0x0200), declaring its load current as the lower of **IA_VBUS_RATED** and 500mA.
8. According to the definition of the test device, the UUT is obliged to set configuration 1. The configured device (the PET) is now allowed to draw **IA_VBUS_RATED** current. The UUT must maintain a session for **TTST_MAINT** min(10s) after setting the configuration.
9. Without any applied current load, check that VBUS average is within appropriate range (**VA_VBUS_AVG_LO** or **VA_VBUS_AVG_HI**) over the next **TAVG_VBUS** (1s).
10. Now apply a load of **IA_VBUS_RATED** as a step increase, checking that VBUS does not go outside the limits **VA_VBUS_TRNS_LO** or **VA_VBUS_TRNS_HI** as appropriate and that VBUS average is within appropriate spec (**VA_VBUS_AVG_LO** or **VA_VBUS_AVG_HI**) over the next **TAVG_VBUS** (1s).

11. Now remove the load of **IA_VBUS_RATED** as a step decrease, checking that VBUS does not go outside the limits **VA_VBUS_TRNS_LO** or **VA_VBUS_TRNS_HI** as appropriate, over the next **TAVG_VBUS**(1s).
12. PET detaches (no capacitive, resistive or current loading on VBUS and data lines not pulled up).
13. Wait **TTST_MAINT** (10s) to allow maintained session to finish, and to allow disconnection to be recognized.

End of Test.

6.7.4.1.2 Part 2 – For a UUT which does not support sessions

1. Ensure VBUS is on.
2. From now on, continuously check that VBUS remains above **VA_VBUS_AVG_LO**.
3. Without any applied current load, check that VBUS average is within appropriate range (**VA_VBUS_AVG_LO** or **VA_VBUS_AVG_HI**) over the next **TAVG_VBUS** (1s).
4. Now apply a load of **IA_VBUS_RATED** as a step increase, checking that VBUS does not go outside the limits **VA_VBUS_TRNS_LO** or **VA_VBUS_TRNS_HI** as appropriate and that VBUS average is within appropriate spec (**VA_VBUS_AVG_LO** or **VA_VBUS_AVG_HI**) over the next **TAVG_VBUS** (1s).
5. Now remove the load of **IA_VBUS_RATED** as a step decrease, checking that VBUS does not go outside the limits **VA_VBUS_TRNS_LO** or **VA_VBUS_TRNS_HI** as appropriate, over the next **TAVG_VBUS** (1s).
6. PET detaches (no capacitive, resistive or current loading on VBUS and data lines not pulled up).
7. Wait **TTST_MAINT** (10s) to allow maintained session to finish, and to allow disconnection to be recognized.

End of Test.

6.7.5 A-UUT Bypass Capacitance

Purpose	To verify OTG A-device or EH VBUS bypass capacitance (**CA_VBUS** and/or **CADP_VBUS**)
Applies to	OTG A-device and EH A-ports, which support sessions
Description	Uses ADP to measure the A-UUT capacitance.
Test setup	Test setup 1 or 2 (see Section 6.3)
Preconditions	'A-UUT Initial Power-up Test' has previously been run to establish the initial conditions for this test. A capacitance of 10µF and a pull-down resistance of 10kΩ are connected across VBUS.
Checklist	E9, ADP19, T6

6.7.5.1 Test procedure

1. Information describing the UUT has been entered into the PET test dialog (see Section 6.4).

6.7.5.1.1 Part 1 – For a UUT which supports ADP

2. Get VBUS turned on, using the method described in Section 6.7.1.
3. Wait for almost **TB_SVLD_BCON** max (1s – 0.1sec = 0.9sec), then connect PET by using D+ pull-up.
4. Check that a bus reset (SE0) occurs after **TA_BCON_LDB** min (100ms), but within **TA_BCON_ARST** max (30s).
5. Check that UUT enumerates PET successfully (up to setting configuration 1) within **TTST_CONFIG** (30s) of end of reset. The PET responds as the test device (VID=0x1A0A, PID=0x0200), with **bcdDevice** bit 0 set to a 1, to indicate that **otg_vbus_off** shall be set. If the UUT does not support HNP Polling, the PET will not set its HNP support bit.
6. 1s after being configured, the PET detaches (no capacitive, resistive or current loading on VBUS and data lines not pulled up).
7. Check that VBUS goes below **VOTG_SESS_VLD** min within **TTST_VBOFF** (5s) (ADP was also required to be disabled by the **otg_vbus_off** flag).
8. Use ADP circuit to evaluate capacitance using rise time. Do this within 1s of VBUS going below **VOTG_SESS_VLD** min.
9. Check that no ADP probe is received for the next 2s. If it is the test is invalidated.
10. Reattach10µF capacitor and 10kΩ pull-down resistor to VBUS.
11. Less than **TTST_NOADP** min (5s – 1s = 4s) after VBUS went below **VOTG_SESS_VLD** min, check that it is still below **VOTG_SESS_VLD** min.
12. Check the A-UUT's capacitance is greater than **CA_VBUS**/**CADP_VBUS** min (1µF). Where the A-UUT is ADP-capable check that the capacitance is less than or equal to **CADP_VBUS** max (6.5µF).
13. Wait **TTST_NOADP** max (6s) from VBUS going off in step 7 to allow **otg_vbus_off** to be cancelled.

End of Test.

6.7.5.1.2 Part 2 – For a UUT which supports SRP but does not support ADP

2. Wait for VBUS to go off and remain off for 5s.

3. The PET detaches (no capacitive, resistive or current loading on V_{BUS} and data lines not pulled up).
4. Use ADP circuit to evaluate capacitance using rise time.
5. Reattach10µF capacitor and 10kΩ pull-down resistor to V_{BUS}.
6. Check the A-UUT's capacitance is greater than C_{A_VBUS}/C_{ADP_VBUS} min (1µF).

End of Test.

6.7.5.1.3 Part 3 – For a UUT which does not support Sessions

2. Power off the UUT then run the test outlined in Section 6.7.5.1.2.

6.7.6 A-UUT SRP

Purpose	This test will check that the A-device responds to SRP requests, both before and after a session.
Applies to	SRP-capable OTG A-devices and EH A-ports
Description	Plug in the A-plug, wait for VBUS to rise and then fall check that this occurs within the correct times. Generate SRP and check the response from the A-UUT is within limits. **Note:** As we are testing SRP functionality, it is not necessary to enumerate at more than one speed. For simplicity the PET will behave as a FS device during this test.
Test setup	Test setup 1 or 2 (see Section 6.3)
Preconditions	'A-UUT Initial Power-up Test' has previously been run to establish the initial conditions for this test. A capacitance of 10µF and a pull-down resistance of 10kΩ are connected across VBUS.
Checklist	T1, T2, SRP3, SRP5, T4

6.7.6.1 Test procedure

1. Information describing the UUT has been entered into the PET test dialog (see Section 6.4).
2. Get VBUS turned on, using the method described in Section 6.7.1.
3. Wait for almost **TB_SVLD_BCON** max (1s – 0.1sec = 0.9sec) from VBUS reaching **VOTG_SESS_VLD** max, then connect PET by using D+ pull-up.
4. Check that a bus reset (SE0) occurs after **TA_BCON_LDB** min (100ms), but within **TA_BCON_ARST** max (30s).
5. Check that UUT enumerates PET successfully (up to setting configuration 1) within **TTST_CONFIG** (30s) of end of reset. The PET responds as the test device (VID=0x1A0A, PID=0x0200). If the UUT does not support HNP Polling, the PET will not set its HNP support bit.
6. Check that session is ended, (i.e. VBUS goes below **VOTG_SESS_VLD** max (4V)) within **TTST_MAINT** max (10.1s).
7. Immediately turn off D+ pull-up.
8. Check that VBUS goes below **VOTG_VBUS_LKG** max (0.7V) within **TSSEND_LKG** max (1s, but allow 2s here as this is not the definitive test for this value) of going below **VOTG_SESS_VLD** max. (Note that accurate measurement of **TSSEND_LKG** is performed by a separate dedicated test).
9. Wait **TB_SSEND_SRP** (1.5s).
10. Check that VBUS is not turned on before end of SRP pulse.PET applies minimum width SRP pulse on D+, of **TB_DATA_PLS** min (5ms).
11. Check that VBUS reaches **VOTG_SESS_VLD** min (0.8V) within **TA_SRP_RSPNS** max (4.9s) from rising edge of SRP pulse, and then reaches **VA_VBUS_AVG_LO** (4.4V) within a further **TA_VBUS_RISE** (100ms). Report actual times and comment on them, as the Supplement recommends better response time than specified.
12. Take D+ high after almost **TB_SVLD_BCON** max (1s – 0.1sec = 0.9sec).
13. Check that a bus reset (SE0) occurs after **TA_BCON_LDB** min (100ms), but within **TA_BCON_ARST** max (30s).
14. Check that UUT enumerates PET successfully (up to setting configuration 1) within **TTST_CONFIG** (30s). The PET responds as the test device (VID=0x1A0A, PID=0x0200). If the UUT does not support HNP Polling, the PET will not set its HNP support bit.

15. Remove any termination on data lines.
16. Wait **TTST_MAINT** max (10.1s) to allow A-UUT to turn off VBUS.
17. Repeat test steps 9-15 using value for SRP pulse length in step 10 of **TB_DATA_PLS** max (10ms).

End of Test.

6.7.7 A-UUT HNP

Purpose	This test will check that the OTG A-device responds to HNP requests, and hands back control after a session.
Applies to	OTG A-device
Description	This test confirms the correct operation of the UUT during HNP. The test is performed in five passes: – Full Speed with min **TA_WAIT_BCON** – High Speed with min **TA_WAIT_BCON** – Full Speed with max **TA_WAIT_BCON** – High Speed with max **TA_WAIT_BCON** – Full Speed with PET simulating OTG V1.3 The same parameters are checked in each case.
Test setup	Test setup 1 or 2 (see Section 6.3)
Preconditions	'A-UUT Initial Power-up Test' has previously been run to establish the initial conditions for this test. A capacitance of 10µF and a pull-down resistance of 10kΩ are connected across VBUS.
Checklist	M6, DF5, DF9, DF11, DF14, HNP3, HNP4, HNP8, HNP9, HNP11a,T13-T15

6.7.7.1 Pre-Test Checks

1. Information describing the UUT has been entered into the PET test dialog (see Section 6.4).
2. Check in user input, that if 'HNP as B-device' is checked, then 'HNP as A-device' is also checked. If not the UUT fails.

6.7.7.2 Test Procedure for UUT with no Support for HNP as A-device

1. Get VBUS turned on, using the method described in Section 6.7.1.
2. Wait for almost **TB_SVLD_BCON** max (1s – 0.1sec = 0.9sec), then connect PET by using D+ pull-up.
3. Check that a bus reset (SE0) occurs after **TA_BCON_LDB** min (100ms), but within **TA_BCON_ARST** max (30s).
4. Check that UUT enumerates PET successfully (up to setting configuration 1), as a Full Speed device within **TTST_CONFIG** (30s) of end of reset. The PET responds as the test device (VID=0x1A0A, PID=0x0200). Check that the UUT does not attempt to set b_hnp_enable or perform HNP polling.
5. PET disconnects D+ pull-up resistor.
6. Wait 2s to allow disconnection to be detected.
7. Repeat 1-7 at High Speed.

6.7.7.3 Test Procedure for UUT which Supports HNP as A-device

1. Get VBUS turned on, using the method described in Section 6.7.1.
2. Wait for almost **TB_SVLD_BCON** max (1s – 0.1sec = 0.9sec), then connect PET by using D+ pull-up.
3. Check that a bus reset (SE0) occurs after **TA_BCON_LDB** min (100ms), but within **TA_BCON_ARST** max (30s).

4. Check that UUT enumerates PET successfully (up to setting configuration 1), as a Full Speed device within **TTST_CONFIG** (30s) of end of reset. The PET responds as the test device (VID=0x1A0A, PID=0x0200). Even if the UUT does not support HNP Polling, the PET sets its HNP support bit.

For A-UUT which supports HNP Polling (Steps 5 and 6):

5. Check during the first period of the configured state that the PET (B-device) is HNP-polled at every **THOST_REQ_POLL** (1-2s). Both too fast and too slow will be flagged as an error. After two polls with host request flag set to 0, the flag is set to 1, so that on the third poll, the OTG A-device under test sees the flag as a 1.
6. Check that the PET is suspended within **THOST_REQ_SUSP** (2s) of the host request flag having been detected as a 1, and that its b_hnp_enable has been set to 1.

For A-UUT which does not support HNP Polling (Step 7):

7. Check that the PET is suspended within **THOST_REQ_POLL** max plus **THOST_REQ_SUSP** max (4s total) of being configured, and that its b_hnp_enable has been set to 1.
8. After 4ms remove D+ pull-up. [In a further run of this test, **TA_AIDL_BDIS** is tested by waiting almost **TA_WAIT_BCON** (200ms minus 2ms = 198ms) to ensure that the A-device under test does not end the session prematurely.
9. Wait **TLDIS_DSCHG** x 4 (25µs x 4 = 100µs).
10. Check that UUT turns on D+ within **TA_BDIS_ACON** max (150ms).
11. Validate D+ high for continuous **TB_ACON_DBNC** (2.5µs).
12. After slightly less than **TB_ACON_BSE0** (150ms – 10ms = 140ms), reset and enumerate the UUT. Do not configure.
13. Stop all bus activity.
14. Check that UUT removes D+ **TA_BIDL_ADIS** (155-200ms) later.
15. Turn on D+ pull-up after slightly less than **TB_SVLD_BCON** max (1s – 0.1s = 0.9s).
16. Check that UUT applies reset after **TA_BCON_LDB** min (100ms) and within **TA_BCON_ARST** (30s).
17. PET disconnects D+ pull-up resistor.
18. Wait 2s to allow disconnection to be detected.
19. Repeat 1-18 at High Speed, with wait time in step 8 at 4ms.
20. Repeat 1-18 at Full Speed, with wait time in step 8 at 199.5ms.
21. Repeat 1-18 at High Speed, with wait time in step 8 at 199.5ms.
22. Repeat 1-18 at Full Speed, with wait time in step 8 at 4ms, but declaring the test device as OTG V1.3. Check that we get SetFeature (**a_hnp_support**) during enumeration.

End of Test.

6.7.8 A-UUT ADP

Purpose	This test will check that the ADP-capable A-device generates ADP probes correctly.
Applies to	ADP-capable A-device
Description	This test shows that the A-device is performing ADP probing and that it can successfully recognize a B-device with minimum VBUS capacitance being plugged in, and also that it will ignore a change in capacitance below **CADP_THR** min. As we are testing ADP functionality, it is not necessary to enumerate at more than one speed. For simplicity the PET will behave as a FS device during this test.
Test setup	Test setup 1 or 2 (see Section 6.3)
Preconditions	'A-UUT Initial Power-up Test' has previously been run to establish the initial conditions for this test. A capacitance of 10µF and a pull-down resistance of 10kΩ are connected across VBUS.
Checklist	ADP1-3, ADP6, ADP22-29

6.7.8.1 Pre-Test Checks

1. Information describing the UUT has been entered into the PET test dialog (see Section 6.4).

6.7.8.2 Test Procedure

1. Start with cable still attached, PET applying 10µFcapacitance and 10kΩ pull-down resistance between VBUS and ground, data lines not pulled up.
2. Disconnect 10µF capacitance and 10kΩ resistance from VBUS.
3. Check that VBUS comes on within 5s.
4. Check that VBUS is below **VOTG_SESS_VLD** min within **TA_WAIT_BCON** max (30s, or as specified by vendor) plus **TA_SSEND_PRB** max (100ms), i.e. within a total of 30.1s. Wait only until it is below **VOTG_SESS_VLD** min. In practice, this fall in VBUS may result from the start of the discharge phase of the first ADP probe.
5. Examine the next 11 ADP probes, as follows in steps 6-8, collecting data for validation.
6. Check VBUS goes to **VADP_DSCHG** (0.15V) or below, for each probe.
7. Detect VBUS rising through 0.25V and then through 0.5V, record time in between, and also record point in time it passes 0.5V, for each probe. This gives an estimate of the size of TADP_RISE.
8. Check that VBUS reaches at least **VADP_PRB** min (0.6V) and check that it does not exceed **VADP_PRB** max (0.75V), for each probe.
9. Validate each of the 10 periods **TA_ADP_PRB** (1.35 - 1.85s) or (0.675 – 0.925s), and check that the cycle to cycle jitter **TADP_PRB_JTR** (5%) is within limits.
10. On first test pass, connect **CADP_VBUS** max (6.5µF) across VBUS.
    On second test pass, connect **CADP_THR** max (900nF) across VBUS.
    Ensure that this is connected between probes. (This should cause PET to be detected by next ADP probe).
11. Check that VBUS goes to **VADP_DSCHG** (0.15V) or below within 2s.
12. Detect VBUS rising through 0.25V and then through 0.5V, record time in between.
13. On the first test pass, from the previous and the new values of rise time we can estimate **IADP_SRC** (1.1 - 1.65mA). Check that the difference in ramp time lies between 885µs and 1626µs. On second test pass, just report times.

14. Check that VBUS reaches **VOTG_SESS_VLD** (0.8V) within **TA_VBUS_ATT** (200ms) from the end of the probe.
15. Wait for VBUS to reach 4.4V. (Don't validate **TA_VBUS_RISE** here – this is done in VBUS tests).
16. Connect D+ resistor.
17. Check that a bus reset (SE0) occurs after **TA_BCON_LDB** min (100ms), but within **TA_BCON_ARST** max (30s).
18. Check that UUT enumerates PET (up to setting configuration 1) successfully within **TTST_CONFIG** (30s). The PET responds as test device (VID=0x1A0A, PID=0x0200). If the UUT does not support HNP Polling, the PET will not set its HNP support bit.
19. After 1s of configured state, turn off D+, and (on first pass only) disconnect VBUS capacitance.
20. Check that VBUS is turned off within **TA_WAIT_BCON** max (30s, or as specified by vendor).
21. In pass 1 only, wait for VBUS to remain off for 5s (in pass 1 it should come on again and remain on for **TA_WAIT_BCON**).
22. Repeat steps 5 to 21 using capacitance value of **CADP_THR** max (900nF) in step 10.
23. Check that an ADP probe is performed within **TA_SSEND_PRB** (100ms) of VBUS going off.
24. Wait for a further ADP probe to be performed.
25. Connect a further 150nF across VBUS (in addition to the 900nF already connected).
26. Check that VBUS is not turned on. This checks **CADP_THR** min.
27. Change capacitance on VBUS back to 10µF, with 10kΩ pull-down resistance.
28. Wait 5s to allow the capacitance change to switch on VBUS ready for next test.

End of Test.

6.7.9 A-UUT Leakage

Purpose	This test will measure **TSSEND_LKG**, **IVBUS_LKG_SRC** and **ROTG_VBUS**.
Applies to	All Targeted Hosts which support sessions.
Description	This test performs SetFeature(**otg_vbus_off**) to create the conditions required to check the values of **TSSEND_LKG**, **IVBUS_LKG_SRC** and **ROTG_VBUS**.
Test setup	Test setup 1 or 2 (see Section 6.3)
Preconditions	'A-UUT Initial Power-up Test' has previously been run to establish the initial conditions for this test. A capacitance of 10µF and a pull-down resistance of 10kΩ are connected across VBUS.
Checklist	SRP1, SRP2, ADP18, T5

6.7.9.1 Test Procedure

1. Information describing the UUT has been entered into the PET test dialog (see Section 6.4).

6.7.9.1.1 Part 1 – For a UUT which supports ADP

2. Wait for VBUS to go off and remain off for 5s.
3. Disconnect bypass capacitance from VBUS.
4. If we are testing an OTG-A or EH with support for ADP but not SRP, wait for VBUS to come on. In all other cases, get VBUS turned on, using the method described in Section 6.7.1.
5. Wait for almost **TB_SVLD_BCON** max (1s – 0.1s = 0.9s).
6. Connect PET by using D+ pull-up.
7. Check that a bus reset (SE0) occurs after **TA_BCON_LDB** min (100ms), but within **TA_BCON_ARST** max (30s).
8. Check that UUT enumerates PET successfully (up to setting configuration 1) within **TTST_CONFIG** (30s). The PET responds as test device (VID=0x1A0A, PID=0x0200), with **bcdDevice** in the Device Descriptor set to 0x0001. Bit 0 represents the requirement to turn VBUS off if we disconnect during the configured period. If the UUT does not support HNP Polling, the PET will not set its HNP support bit.
9. Wait 1s in the configured state, responding to any requests, then take D+ low and simultaneously disconnect the pull-down resistance, from VBUS.
10. Check that VBUS goes below **VOTG_SESS_VLD** max (4V) within **TTST_VBOFF** (5s - required by test device and feature bit specification).
11. Monitor decay and measure time from **VOTG_SESS_VLD** max (4V) to **VOTG_VBUS_LKG** (0.7V). Check that this occurs within **TSSEND_LKG** max (1s).
12. Wait 1s, then connect 2kΩ pull-down resistor to VBUS.
13. Wait 1s.
14. Check that voltage on VBUS is below 140mV. This confirms that **IVBUS_LKG_SRC** is no more than 70µA.

Note: If UUT is not SRP capable then this is not a failure, although meeting **TSSEND_LKG** is still recommended (see [USBOTG&EHv2.0] section 5.4.3).

15. Disconnect 2kΩ pull-down resistor.
16. Connect 2k2Ω pull-up resistor, sourced from 0.8V, to VBUS.
17. Wait 1s.

18. Check that voltage on VBUS is greater than or equal to 0.656V. This proves that **ROTG_VBUS** is greater than or equal to 10kΩ.
19. Disconnect 2k2Ω pull-up resistor, and reconnect 10µF capacitor and 10kΩ pull-down resistor to VBUS.
20. Wait **TTST_NOADP** max (6s) to allow feature bit and special VBUS condition to be cleared. If this is an EH with support for ADP but not SRP, we expect VBUS to come on as a result of the capacitance change; in other cases not.

End of Test.

6.7.9.1.2 Part 2 – For a UUT which does not support ADP but does support SRP

2. Wait for VBUS to go off and remain off for 5s.
3. Disconnect bypass capacitance and pull-down resistance from VBUS.
4. Wait 1s, then connect 2kΩ pull-down resistor to VBUS.
5. Wait 1s.
6. Check that voltage on VBUS is below 140mV. This confirms that **IVBUS_LKG_SRC** is no more than 70µA.
7. Disconnect 2kΩ pull-down resistor.
8. Get VBUS on by using SRP pulse
9. Wait for VBUS to go off
10. Monitor decay and measure time from **VOTG_SESS_VLD** max (4V) to **VOTG_VBUS_LKG** (0.7V). Check that this occurs within **TSSEND_LKG** max (1s).
11. Reconnect bypass capacitance and pull-down resistance to VBUS

End of Test

6.7.10 OTG A-device, Capable of ADP and SRP, State Transition Test

Purpose	This test verifies the UUT follows the correct transitions in the specified state diagrams.
Applies to	OTG A-devices capable of both ADP and SRP.
Description	PET performs the necessary actions to force the UUT between each state transition, to ensure correct operation.
Test setup	Test setup 1 or 2 (see Section 6.3)
Preconditions	'A-UUT Initial Power-up Test' has previously been run to establish the initial conditions for this test. A capacitance of 10µF and a pull-down resistance of 10kΩ are connected across VBUS.
Checklist	ST3, E9b

6.7.10.1 Test Procedure

START ->**a_idle** resulting from **id/.**
(This was done in Power-Up Test).

First perform following test at Full Speed.

1. Start with cable still attached, PET applying 10µF capacitance and 10kΩ pull-down resistance between VBUS and ground, data lines not pulled up; ID pin is connected to ground.
2. If VBUS is on, check for VBUS off within **TA_WAIT_BCON** max (30s, or as specified by vendor).

a_idle ->**a_wait_vrise** resulting from **a_srp_det.**

3. PET checks for ADP probe within **TA_ADP_PRB** (1.85s).
4. PET generates SRP pulse of 7.5ms (typ. **TB_DATA_PLS**).

a_wait_vrise ->**a_wait_vfall** resulting from **id, OR**
a_wait_vrise ->**a_wait_bcon** ->**a_wait_vfall** resulting from **id.**

5. Immediately after VBUS reaches 0.8V during the ADP PET disconnects ID from ground.

a_wait_vfall ->**a_idle** ->**b_idle** resulting from **a_wait_vfall_tmout.**

6. Wait **TSSEND_LKG** max (1s).
7. Check that VBUS is below **VOTG_SESS_VLD** min (0.8V).

b_idle ->**a_idle** resulting from **id/.**

8. Connect ID pin to ground.

a_idle ->**a_wait_vrise** resulting from **adp_change.**

9. Wait for VBUS to remain off for 5s, as behavior after changing state of ID pin is not well defined.
10. PET checks for ADP probe within **TA_ADP_PRB** max (1.85s).

11. PET changes the VBUS connected capacitance to 1µF, leaving the pull-down resistor of **ROTG_VBUS** min (10kΩ) connected to VBUS, to allow detection by ADP probe from UUT.
12. PET checks for further ADP probe within **TA_ADP_PRB** max (1.85s).

a_wait_vrise ->**a_wait_bcon** resulting from **a_vbus_vld.**

13. Check VBUS reaches **VOTG_SESS_VLD** max (4V) within **TA_VBUS_ATT** max (200ms) of end of last ADP probe.

a_wait_bcon ->**a_wait_vfall -> a_idle** resulting from **a_wait_bcon_tmout** and **a_wait_vfall_tmout.**

14. Check that VBUS goes below **VOTG_SESS_VLD** min (0.8V) within **TA_WAIT_BCON** max (30s or as re-defined by vendor) plus **TSSEND_LKG** max (1s) of VBUS reaching **VOTG_SESS_VLD** max.
15. Check that UUT performs an ADP probe within **TA_ADP_PRB** of VBUS going below **VOTG_SESS_VLD** min.

a_idle ->**a_wait_vrise** resulting from **adp_change.**

16. PET changes the VBUS connected capacitance to 10µF, leaving the pull-down resistor of **ROTG_VBUS** min (10kΩ) connected, to allow detection by ADP probe from UUT.
17. Check that UUT performs a further ADP probe within **TA_ADP_PRB** max (1.85s).

a_wait_vrise ->**a_wait_bcon** resulting from **a_vbus_vld.**

18. Check VBUS reaches **VOTG_SESS_VLD** max (4V) within **TA_VBUS_ATT** max (200ms) of end of last ADP probe.

a_wait_bcon ->**a_host** resulting from **b_conn.**

19. PET connects using D+.
20. Check that UUT performs bus reset within **TA_BCON_ARST** max (30s)
21. Check that UUT enumerates PET (up to setting configuration 1) within **TTST_CONFIG** max (30s). PET declares itself as test device (VID=0x1A0A, PID=0x0200), with **bcdDevice** bit 0 set to a 0). If the UUT does not support HNP Polling, the PET will not set its HNP support bit.

a_host ->**a_wait_bcon** ->**a_host** resulting from **b_conn/** followed by **b_conn.**

22. PET disconnects D+
23. PET waits less than **TA_WAIT_BCON** min (1.1s minus 0.1s = 1s).
24. PET connects D+.
25. Check that UUT performs bus reset within **TA_BCON_ARST** max (30s)
26. Check that UUT enumerates PET (up to setting configuration 1) within **TTST_CONFIG** max (30s). PET declares itself as test device (VID=0x1A0A, PID=0x0200), with **bcdDevice** bit 0 set to a 0.). If the UUT does not support HNP Polling, the PET will not set its HNP support bit.

a_host ->**a_wait_vfall** ->**a_idle** ->**b_idle** resulting from **id** and **a_wait_vfall_tmout.**

27. PET disconnects D+ and ID.
28. Check that VBUS goes below **VOTG_SESS_VLD** min (0.8V) within **TSSEND_LKG** max (1s).

b_idle ->**a_idle** resulting from **id/.**

29. Connect ID pin.
30. Wait for VBUS to remain off for 5s, as behavior after changing state of ID pin is not well defined.

a_idle ->**a_wait_vrise** resulting from **a_srp_det.**

31. Check that UUT performs an ADP probe within **TA_ADP_PRB**.
32. PET raises D+, waits 7.5ms (typ. **TB_DATA_PLS**),then lowers D+.

a_wait_vrise ->**a_wait_bcon** resulting from **a_vbus_vld.**

33. Check VBUS reaches **VOTG_SESS_VLD** max (4V) within **TB_SRP_FAIL** max (6s).

a_wait_bcon ->**a_host** resulting from **b_conn.**

34. PET connects D+.
35. Check that UUT performs bus reset within **TA_BCON_ARST** max (30s)
36. Check that UUT enumerates PET (up to setting configuration 1) within **TTST_CONFIG** max (30s). PET declares itself as test device (VID=0x1A0A, PID=0x0200), with **bcdDevice** bit 0 set to a 0. Even if the UUT does not support HNP Polling, the PET sets its HNP support bit.

a_host ->**a_suspend** resulting from **a_bus_reqd/.**

37. After being configured, PET responds to any HNP-Poll with Host Request flag = 1. It checks that its **b_hnp_enable** flag is set, and that the UUT suspends the PET within **THOST_REQ_POLL** max (2s) plus **THOST_REQ_SUSP** max (2s), a total of 4s, of configuring the PET).

a_suspend ->**a_wait_vfall** ->**a_idle** resulting from **a_aidl_bdis_tmr.**

(Nothing to test as no maximum time specified (transition is optional)

a_suspend ->**a_wait_vfall** ->**a_idle** ->**b_idle** resulting from **id.**

38. PET disconnects D+ and ID.
39. Check that VBUS goes below **VOTG_SESS_VLD** min (0.8V) within **TSSEND_LKG** max (1s).

b_idle ->**a_idle** resulting from **id/.**

40. Connect ID pin.
41. Wait for VBUS to remain off for 5s, as behavior after changing state of ID pin is not well defined.

a_idle ->**a_wait_vrise** resulting from **a_srp_det.**

42. Check that UUT performs an ADP probe within **TA_ADP_PRB**.
43. PET raises D+, waits 7.5ms (typ. **TB_DATA_PLS**), then lowers D+.

a_wait_vrise ->**a_wait_bcon** resulting from **a_vbus_vld.**

44. Check VBUS reaches **VOTG_SESS_VLD** max (4V) within **TB_SRP_FAIL** max (6s).

a_wait_bcon ->**a_host** resulting from **b_conn.**

45. PET connects D+.
46. Check that UUT performs bus reset within **TA_BCON_ARST** max (30s).
47. Check that UUT enumerates PET (up to setting configuration 1) within **TTST_CONFIG** max (30s). PET declares itself as test device (VID=0x1A0A, PID=0x0200), with **bcdDevice** bit 0 set to a 0. Even if the UUT does not support HNP Polling, the PET sets its HNP support bit.

a_host ->**a_suspend** resulting from **a_bus_reqd/.**

48. After being configured, PET responds to any HNP-Poll with Host Request flag = 1. It checks that its **b_hnp_enable** flag is set, and that the UUT suspends the PET within **THOST_REQ_POLL** max (2s) plus **THOST_REQ_SUSP** max (2s), a total of 4s, of configuring the PET.

a_suspend ->**a_peripheral** resulting from **b_conn/.**

49. PET disconnects D+.
50. Check that UUT connects D+ within **TA_BDIS_ACON** max (150ms).
51. Check that PET can reset and enumerate the UUT.

a_peripheral ->**a_wait_bcon** resulting from **a_bidl_adis_tmout.**

52. PET suspends bus activity.
53. Check that UUT disconnects D+ within **TA_BIDL_ADIS** max (200ms).

a_wait_bcon ->**a_host** resulting from **b_conn.**

54. PET connects D+.
55. Check that UUT performs bus reset within **TA_BCON_ARST** max (30s)
56. Check that UUT enumerates PET (up to setting configuration 1) within **TTST_CONFIG** max (30s). PET declares itself as test device (VID=0x1A0A, PID=0x0200), with **bcdDevice** bit 0 set to a 0. Even if the UUT does not support HNP Polling, the PET sets its HNP support bit.

a_host ->**a_suspend** resulting from **a_bus_reqd/.**

57. After being configured, PET responds to any HNP-Poll with Host Request flag = 1. It checks that its **b_hnp_enable** flag is set, and that the UUT suspends the PET within **THOST_REQ_POLL** max (2s) plus **THOST_REQ_SUSP** max (2s), a total of 4s, of configuring the PET.

a_suspend ->**a_peripheral** resulting from **b_conn/.**

58. PET disconnects D+.
59. Check that UUT connects D+ within **TA_BDIS_ACON** max (150ms)
60. Check that PET can reset and enumerate the UUT.

a_peripheral ->**a_wait_vfall ->a_idle** ->**b_idle** resulting from **id.**

61. PET disconnects ID.
62. D+ should go low at this point. Impractical to test.
63. Check that VBUS goes below **VOTG_SESS_VLD** min (0.8V) within **TSSEND_LKG** max (1s).

b_idle ->**a_idle** resulting from **id/.**

64. Connect ID pin.
65. Wait 5s to allow the ID pin change to be detected.

Repeat complete test at High Speed.

6.7.10.2 Paths not tested:

Any path resulting from **a_bus_drop or a_bus_drop/** (not practical).
Any path resulting from **a_wait_vrise_tmout** (not practical).
Any path resulting from **a_vbus_vld/** (not practical).
Any path resulting from **a_bus_req/** (not practical).
a_suspend ->**a_wait_bcon.**
a_suspend ->**a_wait_vfall** ->**a_idle** resulting from **a_aidl_bdis_tmr** (Nothing to test as no maximum time specified (transition is optional).

6.7.11 OTG A-device, Capable of ADP but not SRP, State Transition Test

Purpose	This test verifies the UUT follows the correct transitions in the specified state diagrams.
Applies to	OTG A-devices capable of ADP but not SRP.
Description	PET performs the necessary actions to force the UUT between each state transition, to ensure correct operation.
Test setup	Test setup 1 or 2 (see Section 6.3)
Preconditions	'A-UUT Initial Power-up Test' has previously been run to establish the initial conditions for this test. A capacitance of 10µF and a pull-down resistance of 10kΩ are connected across VBUS.
Checklist	ST3, E9b

Test Procedure

START ->**a_idle** resulting from **id/.**
(This was done in Power-Up Test).

First perform following test at Full Speed.

1. Start with cable still attached, PET applying 10µF capacitance and 10kΩ pull-down resistance between VBUS and ground, data lines not pulled up; ID pin is connected to ground.
2. If VBUS is on, check for VBUS off within **TA_WAIT_BCON** max (30s, or as specified by vendor).

a_idle ->**a_wait_vrise** resulting from **adp_change.**

3. PET checks for ADP probe within **TA_ADP_PRB** max (1.85s).
4. PET changes the VBUS connected capacitance to 1µF, leaving the pull-down resistor of **ROTG_VBUS** min (10kΩ) connected to VBUS, to allow detection by ADP probe from UUT.

a_wait_vrise ->**a_wait_vfall** resulting from **id, OR**
a_wait_vrise ->**a_wait_bcon** ->**a_wait_vfall** resulting from **id.**

5. Immediately VBUS reaches 0.8V during the ADP PET disconnects ID from ground.

a_wait_vfall ->**a_idle** ->**b_idle** resulting from **a_wait_vfall_tmout.**

6. Wait **TSSEND_LKG** max (1s).
7. Check that VBUS is below **VOTG_SESS_VLD** min (0.8V).

b_idle ->**a_idle** resulting from **id/.**

8. Connect ID pin to ground.

a_idle ->**a_wait_vrise** resulting from **adp_change.**

9. Wait for VBUS to remain off for 5s, as behavior after changing state of ID pin is not well defined.
10. PET checks for ADP probe within **TA_ADP_PRB** max (1.85s).

11. PET changes the VBUS connected capacitance to 10µF, leaving the pull-down resistor of **ROTG_VBUS** min (10kΩ) connected to VBUS,to allow detection by ADP probe from UUT.
12. PET checks for further ADP probe within **TA_ADP_PRB** max (1.85s).

a_wait_vrise ->**a_wait_bcon** resulting from **a_vbus_vld.**

13. Check VBUS reaches **VOTG_SESS_VLD** max (4V) within **TA_VBUS_ATT** max (200ms) of end of last ADP probe.

a_wait_bcon ->**a_wait_vfall -> a_idle** resulting from **a_wait_bcon_tmout** and **a_wait_vfall_tmout.**

14. Check that VBUS goes below **VOTG_SESS_VLD** min (0.8V) within **TA_WAIT_BCON** max (30s or as re-defined by vendor) plus **TSSEND_LKG** max (1s) of VBUS reaching **VOTG_SESS_VLD** max.
15. Check that UUT performs an ADP probe within **TA_ADP_PRB** of VBUS going below **VOTG_SESS_VLD** min.

a_idle ->**a_wait_vrise** resulting from **adp_change.**

16. PET changes the VBUS connected capacitance to 1µF, leaving the pull-down resistor of **ROTG_VBUS** min (10kΩ) connected, to allow detection by ADP probe from UUT.
17. Check that UUT performs a further ADP probe within **TA_ADP_PRB** max (1.85s).

a_wait_vrise ->**a_wait_bcon** resulting from **a_vbus_vld.**

18. Check VBUS reaches **VOTG_SESS_VLD** max (4V) within **TA_VBUS_ATT** max (200ms) of end of last ADP probe.

a_wait_bcon ->**a_host** resulting from **b_conn.**

19. PET connects using D+.
20. Check that UUT performs bus reset within **TA_BCON_ARST** max (30s)
21. Check that UUT enumerates PET (up to setting configuration 1) within **TTST_CONFIG** max (30s). PET declares itself as test device (VID=0x1A0A, PID=0x0200), with **bcdDevice** bit 0 set to a 0). If the UUT does not support HNP Polling, the PET will not set its HNP support bit.

a_host ->**a_wait_bcon** ->**a_host** resulting from **b_conn/** followed by **b_conn.**

22. PET disconnects D+
23. PET waits less than **TA_WAIT_BCON** min (1.1s minus 0.1s = 1s).
24. PET connects D+.
25. Check that UUT performs bus reset within **TA_BCON_ARST** max (30s)
26. Check that UUT enumerates PET (up to setting configuration 1) within **TTST_CONFIG** max (30s). PET declares itself as test device (VID=0x1A0A, PID=0x0200), with **bcdDevice** bit 0 set to a 0.). If the UUT does not support HNP Polling, the PET will not set its HNP support bit.

a_host ->**a_wait_vfall** ->**a_idle** ->**b_idle** resulting from **id** and **a_wait_vfall_tmout.**

27. PET disconnects D+ and ID.
28. Check that VBUS goes below **VOTG_SESS_VLD** min (0.8V) within **TSSEND_LKG** max (1s).

b_idle ->**a_idle** resulting from **id/.**

29. Connect ID pin.
30. Wait for VBUS to remain off for 5s, as behavior after changing state of ID pin is not well defined.

a_idle ->**a_wait_vrise** resulting from **adp_change.**

31. PET checks for ADP probe within **TA_ADP_PRB** max (1.85s).
32. PET changes the VBUS connected capacitance to 5.5µF, leaving the pull-down resistor of **ROTG_VBUS** min (10kΩ) connected to VBUS, to allow detection by ADP probe from UUT.
33. PET checks for further ADP probe within **TA_ADP_PRB** max (1.85s).

a_wait_vrise ->**a_wait_bcon** resulting from **a_vbus_vld.**

34. Check VBUS reaches **VOTG_SESS_VLD** max (4V) within **TA_VBUS_ATT** max (200ms) of end of last ADP probe.

a_wait_bcon ->**a_host** resulting from **b_conn.**

35. PET connects D+.
36. Check that UUT performs bus reset within **TA_BCON_ARST** max (30s)
37. Check that UUT enumerates PET (up to setting configuration 1) within **TTST_CONFIG** max (30s). PET declares itself as test device (VID=0x1A0A, PID=0x0200), with **bcdDevice** bit 0 set to a 0. Even if the UUT does not support HNP Polling, the PET sets its HNP support bit.

a_host ->**a_suspend** resulting from **a_bus_reqd/.**

38. After being configured, PET responds to any HNP-Poll with Host Request flag = 1. It checks that its **b_hnp_enable** flag is set, and that the UUT suspends the PET within **THOST_REQ_POLL** max (2s) plus **THOST_REQ_SUSP** max (2s), a total of 4s, of configuring the PET).

a_suspend ->**a_wait_vfall** ->**a_idle** resulting from **a_aidl_bdis_tmr.**

(Nothing to test as no maximum time specified (transition is optional)

a_suspend ->**a_wait_vfall** ->**a_idle** ->**b_idle** resulting from **id.**

39. PET disconnects D+ and ID.
40. Check that VBUS goes below **VOTG_SESS_VLD** min (0.8V) within **TSSEND_LKG** max (1s).

b_idle ->**a_idle** resulting from **id/.**

41. Connect ID pin.
42. Wait for VBUS to remain off for 5s, as behavior after changing state of ID pin is not well defined.

a_idle ->**a_wait_vrise** resulting from **adp_change.**

43. PET checks for ADP probe within **TA_ADP_PRB** max (1.85s).
44. PET changes the VBUS connected capacitance to 10µF, leaving the pull-down resistor of **ROTG_VBUS** min (10kΩ) connected to VBUS, to allow detection by ADP probe from UUT.
45. PET checks for further ADP probe within **TA_ADP_PRB** max (1.85s).

a_wait_vrise ->**a_wait_bcon** resulting from **a_vbus_vld.**

46. Check VBUS reaches **VOTG_SESS_VLD** max (4V) within **TA_VBUS_ATT** max (200ms) of end of last ADP probe.

a_wait_bcon ->**a_host** resulting from **b_conn.**

47. PET connects D+.
48. Check that UUT performs bus reset within **TA_BCON_ARST** max (30s).
49. Check that UUT enumerates PET (up to setting configuration 1) within **TTST_CONFIG** max (30s). PET declares itself as test device (VID=0x1A0A, PID=0x0200), with **bcdDevice** bit 0 set to a 0. Even if the UUT does not support HNP Polling, the PET sets its HNP support bit.

a_host ->**a_suspend** resulting from **a_bus_reqd/.**

50. After being configured, PET responds to any HNP-Poll with Host Request flag = 1. It checks that its **b_hnp_enable** flag is set, and that the UUT suspends the PET within **THOST_REQ_POLL** max (2s) plus **THOST_REQ_SUSP** max (2s), a total of 4s, of configuring the PET.

a_suspend ->**a_peripheral** resulting from **b_conn/.**

51. PET disconnects D+.
52. Check that UUT connects D+ within **TA_BDIS_ACON** max (150ms).
53. Check that PET can reset and enumerate the UUT.

a_peripheral ->**a_wait_bcon** resulting from **a_bidl_adis_tmout.**

54. PET suspends bus activity.
55. Check that UUT disconnects D+ within **TA_BIDL_ADIS** max (200ms).

a_wait_bcon ->**a_host** resulting from **b_conn.**

56. PET connects D+.
57. Check that UUT performs bus reset within **TA_BCON_ARST** max (30s)
58. Check that UUT enumerates PET (up to setting configuration 1) within **TTST_CONFIG** max (30s). PET declares itself as test device (VID=0x1A0A, PID=0x0200), with **bcdDevice** bit 0 set to a 0. Even if the UUT does not support HNP Polling, the PET sets its HNP support bit.

a_host ->**a_suspend** resulting from **a_bus_reqd/.**

59. After being configured, PET responds to any HNP-Poll with Host Request flag = 1. It checks that its **b_hnp_enable** flag is set, and that the UUT suspends the PET within **THOST_REQ_POLL** max (2s) plus **THOST_REQ_SUSP** max (2s), a total of 4s, of configuring the PET.

a_suspend ->**a_peripheral** resulting from **b_conn/.**

60. PET disconnects D+.
61. Check that UUT connects D+ within **TA_BDIS_ACON** max (150ms)
62. Check that PET can reset and enumerate the UUT.

a_peripheral ->**a_wait_vfall ->a_idle** ->**b_idle** resulting from **id.**

63. PET disconnects ID.
64. D+ should go low at this point. Impractical to test.
65. Check that VBUS goes below **VOTG_SESS_VLD** min (0.8V) within **TSSEND_LKG** max (1s).

b_idle ->**a_idle** resulting from **id/.**

66. Connect ID pin.
67. Wait 5s to allow the ID pin change to be detected.
    Repeat complete test at High Speed.

Paths not tested:

Any path resulting from **a_bus_drop or a_bus_drop/** (not practical).
Any path resulting from **a_wait_vrise_tmout** (not practical).
Any path resulting from **a_vbus_vld/** (not practical).
Any path resulting from **a_bus_req/** (not practical).
a_suspend ->**a_wait_bcon.**
a_suspend ->**a_wait_vfall** ->**a_idle** resulting from **a_aidl_bdis_tmr** (Nothing to test as no maximum time specified (transition is optional).

6.7.12 OTG A-device, Capable of SRP but not ADP, State Transition Test

Purpose	This test verifies the UUT follows the correct transitions in the specified state diagrams.
Applies to	OTG A-devices capable of SRP but not ADP.
Description	PET performs the necessary actions to force the UUT between each state transition, to ensure correct operation.
Test setup	Test setup 1 or 2 (see Section 6.3)
Preconditions	'A-UUT Initial Power-up Test' has previously been run to establish the initial conditions for this test. A capacitance of 10µF and a pull-down resistance of 10kΩ are connected across VBUS.
Checklist	ST3, E9a, E9b

6.7.12.1 Test Procedure

START ->**a_idle** resulting from **id/.**
(This was done in Power-Up Test).

First perform following test at Full Speed.

1. Start with cable still attached, PET applying 10µF capacitance and 10kΩ pull-down resistance between VBUS and ground, data lines not pulled up; ID pin is connected to ground.
2. If VBUS is on, check for VBUS off within **TA_WAIT_BCON** max (30s, or as specified by vendor).

a_idle ->**a_wait_vrise** resulting from **a_srp_det.**

3. PET generates SRP pulse of 7.5ms (typ. **TB_DATA_PLS**).

a_wait_vrise ->**a_wait_vfall** resulting from **id, OR**
a_wait_vrise ->**a_wait_bcon** ->**a_wait_vfall** resulting from **id.**

4. PET disconnects ID from ground.

a_wait_vfall ->**a_idle** ->**b_idle** resulting from **a_wait_vfall_tmout.**

5. Wait **TSSEND_LKG** max (1s).
6. Check that VBUS is below **VOTG_SESS_VLD** min (0.8V).

b_idle ->**a_idle** resulting from **id/.**

7. Connect ID pin to ground.

a_idle ->**a_wait_vrise** resulting from **a_srp_det.**

8. Wait for VBUS to remain off for 5s, as behavior after changing state of ID pin is not well defined.
9. PET generates SRP pulse of 7.5ms (typ. **TB_DATA_PLS**).

a_wait_vrise ->**a_wait_bcon** resulting from **a_vbus_vld.**

10. Check VBUS reaches **VOTG_SESS_VLD** max (4V) within **TB_SRP_FAIL** max (6s) of SRP pulse.

a_wait_bcon ->**a_wait_vfall -> a_idle** resulting from **a_wait_bcon_tmout** and **a_wait_vfall_tmout.**

11. Check that VBUS goes below **VOTG_SESS_VLD** min (0.8V) within **TA_WAIT_BCON** max (30s or as re-defined by vendor) plus **TSSEND_LKG** max (1s) of VBUS reaching **VOTG_SESS_VLD** max.
12. Wait **TB_SSEND_SRP** min (1.5s).

a_idle ->**a_wait_vrise** resulting from **a_srp_det.**

13. PET generates SRP pulse of 7.5ms (typ. **TB_DATA_PLS**).

a_wait_vrise ->**a_wait_bcon** resulting from **a_vbus_vld.**

14. Check VBUS reaches **VOTG_SESS_VLD** max (4V) within **TB_SRP_FAIL** max (6s) of SRP pulse.

a_wait_bcon ->**a_host** resulting from **b_conn.**

15. PET connects using D+.
16. Check that UUT performs bus reset within **TA_BCON_ARST** max (30s).
17. Check that UUT enumerates PET (up to setting configuration 1) within **TTST_CONFIG** max (30s). PET declares itself as test device (VID=0x1A0A, PID=0x0200), with **bcdDevice** bit 0 set to a 0. If the UUT does not support HNP Polling, the PET will not set its HNP support bit.

a_host ->**a_wait_bcon** ->**a_host** resulting from **b_conn/** followed by **b_conn.**

18. PET disconnects D+.
19. PET waits less than **TA_WAIT_BCON** min (1.1s minus 0.1s = 1s).
20. PET connects D+.
21. Check that UUT performs bus reset within **TA_BCON_ARST** max (30s).
22. Check that UUT enumerates PET (up to setting configuration 1) within **TTST_CONFIG** max (30s). PET declares itself as test device (VID=0x1A0A, PID=0x0200), with **bcdDevice** bit 0 set to a 0. If the UUT does not support HNP Polling, the PET will not set its HNP support bit.

a_host ->**a_wait_vfall** ->**a_idle** ->**b_idle** resulting from **id** and **a_wait_vfall_tmout.**

23. PET disconnects D+ and ID.
24. Check that VBUS goes below **VOTG_SESS_VLD** min (0.8V) within **TSSEND_LKG** max (1s).

b_idle ->**a_idle** resulting from **id/.**

25. Connect ID pin to ground.
26. Check that VBUS goes above **VOTG_SESS_VLD** max (4V) within **TA_VBUS_ATT** max (200ms).
27. Wait for VBUS to remain off for 5s, as behavior after changing state of ID pin is not well defined.

a_idle ->**a_wait_vrise** resulting from **a_srp_det.**

28. PET generates SRP pulse of 7.5ms (typ. **TB_DATA_PLS**).

a_wait_vrise ->**a_wait_bcon** resulting from **a_vbus_vld.**

29. Check VBUS reaches **VOTG_SESS_VLD** max (4V) within **TB_SRP_FAIL** max (6s).

a_wait_bcon ->**a_host** resulting from **b_conn.**

30. PET connects D+.
31. Check that UUT performs bus reset within **TA_BCON_ARST** max (30s).
32. Check that UUT enumerates PET (up to setting configuration 1) within **TTST_CONFIG** max (30s). PET declares itself as test device (VID=0x1A0A, PID=0x0200), with **bcdDevice** bit 0 set to a 0. Even if the UUT does not support HNP Polling, the PET sets its HNP support bit.

a_host ->**a_suspend** resulting from **a_bus_reqd/.**

33. After being configured, PET responds to any HNP-Poll with Host Request flag = 1. It checks that its **b_hnp_enable** flag is set and that the UUT suspends the PET within **THOST_REQ_POLL** max (2s) plus **THOST_REQ_SUSP** max (2s), a total of 4s, of configuring the PET.

a_suspend ->**a_wait_vfall** ->**a_idle** resulting from **a_aidl_bdis_tmr.**

(Nothing to test as no maximum time specified (transition is optional)).

a_suspend ->**a_wait_vfall** ->**a_idle** ->**b_idle** resulting from **id.**

34. PET disconnects D+ and ID.
35. Check that VBUS goes below **VOTG_SESS_VLD** min (0.8V) within **TSSEND_LKG** max (1s).

b_idle ->**a_idle** resulting from **id/.**

36. Connect ID pin to ground.
37. Wait for VBUS to remain off for 5s, as behavior after changing state of ID pin is not well defined.

a_idle ->**a_wait_vrise** resulting from **a_srp_det.**

38. PET generates SRP pulse of 7.5ms (typ. **TB_DATA_PLS**).

a_wait_vrise ->**a_wait_bcon** resulting from **a_vbus_vld.**

39. Check VBUS reaches **VOTG_SESS_VLD** max (4V) within **TB_SRP_FAIL** max (6s).

a_wait_bcon ->**a_host** resulting from **b_conn.**

40. PET connects D+.
41. Check that UUT performs bus reset within **TA_BCON_ARST** max (30s).
42. Check that UUT enumerates PET (up to setting configuration 1) within **TTST_CONFIG** max (30s). PET declares itself as test device (VID=0x1A0A, PID=0x0200), with **bcdDevice** bit 0 set to a 0. Even if the UUT does not support HNP Polling, the PET sets its HNP support bit.

a_host ->**a_suspend** resulting from **a_bus_reqd/.**

43. After being configured, PET responds to any HNP-Poll with Host Request flag = 1. It checks that its **b_hnp_enable** flag is set, and that the UUT suspends the PET within **THOST_REQ_POLL** max (2s) plus **THOST_REQ_SUSP** max (2s), a total of 4s, of configuring the PET.

a_suspend ->**a_peripheral** resulting from **b_conn/.**

44. PET disconnects D+.
45. Check that UUT connects D+ within **TA_BDIS_ACON** max (150ms)
46. Check that PET can reset and enumerate the UUT.

a_peripheral ->**a_wait_bcon** resulting from **a_bidl_adis_tmout.**

47. PET suspends bus activity.
48. Check that UUT disconnects D+ within **TA_BIDL_ADIS** max (200ms).

a_wait_bcon ->**a_host** resulting from **b_conn.**

49. PET connects D+.
50. Check that UUT performs bus reset within **TA_BCON_ARST** max (30s).
51. Check that UUT enumerates PET (up to setting configuration 1) within **TTST_CONFIG** max (30s). PET declares itself as test device (VID=0x1A0A, PID=0x0200), with **bcdDevice** bit 0 set to a 0. Even if the UUT does not support HNP Polling, the PET sets its HNP support bit.

a_host ->**a_suspend** resulting from **a_bus_reqd/.**

52. After being configured, PET responds to any HNP-Poll with Host Request flag = 1. It checks that its **b_hnp_enable** flag is set, and that the UUT suspends the PET within **THOST_REQ_POLL** max (2s) plus **THOST_REQ_SUSP** max (2s), a total of 4s, of configuring the PET.

a_suspend ->**a_peripheral** resulting from **b_conn/.**

53. PET disconnects D+.
54. Check that UUT connects D+ within **TA_BDIS_ACON** max (150ms).
55. Check that PET can reset and enumerate the UUT.

.

a_peripheral ->**a_wait_vfall ->a_idle** ->**b_idle** resulting from **id.**

56. PET disconnects ID from ground.
57. D+ should go low at this point. Impractical to test.
58. Check that VBUS goes below **VOTG_SESS_VLD** min (0.8V) within **TSSEND_LKG** max (1s).

b_idle ->**a_idle** resulting from **id/.**

59. Connect ID pin to ground.
60. Wait 5s to allow the ID pin change to be detected.

Repeat complete test at High Speed.

6.7.12.2 Paths not tested:

Any path resulting from **a_bus_drop or a_bus_drop/** (not practical).
Any path resulting from **a_wait_vrise_tmout** (not practical).
Any path resulting from **a_vbus_vld/** (not practical).
Any path resulting from **a_bus_req/** (not practical).
a_suspend ->**a_wait_bcon.**

a_suspend ->**a_wait_vfall** ->**a_idle** resulting from **a_aidl_bdis_tmr** (Nothing to test as no maximum time specified (transition is optional)).

6.7.13 A-OTG, with no Session Support, State Transition Test

Purpose	This test verifies the UUT follows the correct transitions in the specified state diagrams.
Applies to	A-OTG devices which do not support sessions.
Description	PET performs the necessary actions to force the UUT between each state transition, to ensure correct operation.
Test setup	UUT remains connected to PET via special test cable.
Preconditions	'A-UUT Initial Power-up Test' has previously been run to establish the initial conditions for this test.
Parameters	
Checklist	ST3, E9a, E9b
Pass Criteria	All checks specified in tests are satisfied.

Note: Where necessary, **a_bus_req** is assumed to be *true* to force VBUS to be switched on automatically.

6.7.13.1 Test Procedure

START -> **a_idle** -> **a_wait_vrise** -> **a_wait_bcon** resulting from **id/**
(This was done in Power-Up Test)

First perform following test at Full Speed.

1. Start with cable still attached, PET applying 10µF capacitance and 10kΩ pull-down resistance between VBUS and ground, data lines not pulled up; ID pin is connected to ground.
2. Check that VBUS is above **VOTG_SESS_VLD** max (4V).

a_wait_bcon -> a_wait_vfall -> a_idle -> b_idle resulting from **id**

3. PET disconnects ID pin from ground.
4. Check that VBUS goes below **VOTG_SESS_VLD** min (0.8V) within **TSSEND_LKG** max (1 sec).
5. Wait 1 second

b_idle -> **a_idle** -> **a_wait_vrise** -> **a_wait_bcon** resulting from **id/** and **a_bus_req**

6. PET connects ID pin to ground
7. Check that VBUS is above **VOTG_SESS_VLD** max (4V) within **TA_VBUS_ATT** max (200ms). Check rise time from **VOTG_VBUS_LKG** to **VA_VBUS_AVG_LO** does not exceed **TA_VBUS_RISE**.

a_wait_bcon -> **a_host** resulting from **b_conn**

8. PET connects using D+.
9. Check that UUT performs bus reset within **TA_BCON_ARST** max (30 sec)
10. Check that UUT enumerates PET (up to setting configuration 1) within **TTST_CONFIG** max (30 sec). PET declares itself as test device (VID=0x1A0A, PID=0x0200), with bcdDevice bit 0 set to a 0. (If the UUT does not support HNP Polling, the PET will not set its HNP support bit.)

a_host -> **a_wait_bcon** -> **a_host** resulting from **b_conn/** followed by **b_conn**

11. PET disconnects D+
12. PET waits less than **TA_WAIT_BCON** min (1.1 sec minus .1 seconds = 1 second).

13. PET connects D+.
14. Check that UUT performs bus reset within **TA_BCON_ARST** max (30 sec)
15. Check that UUT enumerates PET (up to setting configuration 1) within **TTST_CONFIG** max (30 sec). PET declares itself as test device (VID=0x1A0A, PID=0x0200), with bcdDevice bit 0 set to a 0.

a_host -> **a_wait_vfall** -> **a_idle** -> **b_idle** resulting from **id** and **a_wait_vfall_tmout**

16. PET disconnects ID pin, then disconnects D+.
17. Check that VBUS goes below **VOTG_SESS_VLD** min (0.8V) within **TSSEND_LKG** max (1 sec).
18. Wait 1 second

b_idle -> **a_idle** -> **a_wait_vrise** -> **a_wait_bcon** resulting from **id/**

19. PET connects ID pin to ground
20. Check that VBUS is above **VOTG_SESS_VLD** max (4V) within **TA_VBUS_ATT** max (200ms).

a_wait_bcon -> **a_host** resulting from **b_conn**

21. PET connects using D+.
22. Check that UUT performs bus reset within **TA_BCON_ARST** max (30 sec)
23. Check that UUT enumerates PET (up to setting configuration 1) within **TTST_CONFIG** max (30 sec). PET declares itself as test device (VID=0x1A0A, PID=0x0200), with bcdDevice bit 0 set to a 0. Even if the UUT does not support HNP Polling, the PET sets its HNP support bit.

a_host -> **a_suspend** resulting from **a_bus_reqd/**

24. After being configured, PET checks receipt of HNP-polling and responds with Host Request flag = 1. It then checks that its b_hnp_enable flag is set, and that the UUT suspends the PET within **THOST_REQ_POLL** max (2s) plus **THOST_REQ_SUSP** max (2s), a total of 4s, of configuring the PET.

a_suspend -> **a_wait_vfall** -> **a_idle** -> **b_idle** resulting from **id**

25. PET disconnects ID pin, then disconnects D+.
26. Check that VBUS goes below **VOTG_SESS_VLD** min (0.8V) within **TSSEND_LKG** max (1 sec).
27. Wait 1 second

b_idle -> **a_idle** -> **a_wait_vrise** -> **a_wait_bcon** resulting from **id/**

28. PET connects ID pin to ground
29. Check that VBUS is above **VOTG_SESS_VLD** max (4V) within **TA_VBUS_ATT** max (200ms).

a_wait_bcon -> **a_host** resulting from **b_conn**

30. PET connects using D+.
31. Check that UUT performs bus reset within **TA_BCON_ARST** max (30 sec)
32. Check that UUT enumerates PET (up to setting configuration 1) within **TTST_CONFIG** max (30 sec). PET declares itself as test device (VID=0x1A0A, PID=0x0200), with bcdDevice bit 0 set to a 0. Even if the UUT does not support HNP Polling, the PET sets its HNP support bit.

a_host -> **a_suspend** resulting from **a_bus_reqd/**

33. After being configured, PET checks receipt of HNP-polling and responds with Host Request flag = 1. It then checks that its b_hnp_enable flag is set, and that the UUT suspends the PET within **THOST_REQ_POLL** max (2s) plus **THOST_REQ_SUSP** max (2s), a total of 4s, of configuring the PET.

a_suspend -> **a_peripheral** resulting from **b_conn/**

34. PET disconnects D+.
35. Check that UUT connects D+ within **TA_BDIS_ACON** max (150ms)
36. Check that PET can reset and enumerate the UUT.

a_peripheral -> **a_wait_bcon** resulting from **a_bidl_adis_tmout**

37. PET suspends bus activity.
38. Check that UUT disconnects D+ within **TA_BIDL_ADIS** max (200ms)

a_wait_bcon -> **a_host** resulting from **b_conn**

39. PET connects D+.
40. Check that UUT performs bus reset within **TA_BCON_ARST** max (30 sec)
41. Check that UUT enumerates PET (up to setting configuration 1) within **TTST_CONFIG** max (30 sec). PET declares itself as test device (VID=0x1A0A, PID=0x0200), with bcdDevice bit 0 set to a 0. Even if the UUT does not support HNP Polling, the PET sets its HNP support bit.

a_host -> **a_suspend** resulting from **a_bus_reqd/**

42. After being configured, PET checks receipt of HNP-polling and responds with Host Request flag = 1. It then checks that its b_hnp_enable flag is set, and that the UUT suspends the PET within **THOST_REQ_POLL** max (2s) plus **THOST_REQ_SUSP** max (2s), a total of 4s, of configuring the PET.

a_suspend -> **a_peripheral** resulting from **b_conn/**

43. PET disconnects D+.
44. Check that UUT connects D+ within **TA_BDIS_ACON** max (150ms)
45. Check that PET can reset and enumerate the UUT.

a_peripheral -> **a_wait_vfall -> a_idle** -> **b_idle** resulting from **id**

46. PET disconnects ID pin from ground
47. D+ should go low at this point. Impractical to test.
48. Check that VBUS goes below **VOTG_SESS_VLD** min (0.8V) within **TSSEND_LKG** max (1 sec).
49. Wait 1 second

b_idle -> **a_idle** -> **a_wait_vrise** -> **a_wait_bcon** resulting from **id/**

50. PET connects ID pin to ground
51. Check that VBUS is above **VOTG_SESS_VLD** max (4V) within **TA_VBUS_ATT** max (200ms).

    Repeat complete test at High Speed

52. Wait 45s, while checking that VBUS remains on.

End of Test

6.7.13.2 Paths not tested:

Any path resulting from **a_bus_drop or a_bus_drop/** (not practical).
Any path resulting from **a_wait_vrise_tmout** (not practical).
Any path resulting from **a_vbus_vld/** (not practical).
a_susp -> **a_host** resulting from **a_bus_req/** (not practical).
a_suspend -> **a_wait_bcon**
a_suspend -> **a_wait_vfall** -> **a_idle** resulting from **a_aidl_bdis_tmr** (Nothing to test as no maximum time specified (transition is optional)

6.7.14 EH, Capable of ADP and SRP, State Transition Test (Standard-A)

Purpose	This test verifies the UUT follows the correct transitions in the specified state diagrams.
Applies to	EHs, capable of both ADP and SRP, using Standard-A receptacles.
Description	PET performs the necessary actions to force the UUT between each state transition, to ensure correct operation.
Test setup	Test setup 2 (See Section 6.3.2)
Preconditions	'A-UUT Initial Power-up Test' has previously been run to establish the initial conditions for this test. A capacitance of 10µF and a pull-down resistance of 10kΩ are connected across VBUS.
Checklist	ST2

6.7.14.1 Test Procedure

START ->**a_idle.**
(This was done in Power-Up Test).

First perform following test at Full Speed.

1. Start with cable still attached, PET applying 10µF capacitance and 10kΩ pull-down resistance between VBUS and ground, data lines not pulled up.
2. If VBUS is on, check for VBUS off within **TA_WAIT_BCON** max (30s, or as specified by vendor).

a_idle -> **a_wait_vrise** resulting from **adp_change.**

3. PET checks for ADP probe.
4. PET changes capacitance across VBUS to 1µF, leaving the pull-down resistor of **ROTG_VBUS** min (10kΩ) connected, to allow detection by ADP probe from UUT.
5. PET checks for further ADP probe.

a_wait_vrise ->**a_wait_bcon** resulting from **a_vbus_vld.**

6. Check VBUS reaches **VOTG_SESS_VLD** max (4V) within **TA_VBUS_ATT** max (200ms) of end of last ADP probe.

a_wait_bcon ->**a_wait_vfall -> a_idle** resulting from **a_wait_bcon_tmout** and **a_wait_vfall_tmout.**

7. Check that VBUS goes below **VOTG_SESS_VLD** min (0.8V) within **TA_WAIT_BCON** max (30s or as re-defined by vendor) plus **TSSEND_LKG** max (1s).
8. Check that UUT performs an ADP probe within **TA_ADP_PRB**.

a_idle -> **a_wait_vrise** resulting from **adp_change.**

9. PET checks for ADP probe.
10. PET changes capacitance across VBUS back to 10µF, leaving the pull-down resistor of **ROTG_VBUS** min (10kΩ) connected, to VBUSto allow detection by ADP probe from UUT.
11. PET checks for further ADP probe.

a_wait_vrise ->**a_wait_bcon** resulting from **a_vbus_vld.**

12. Check VBUS reaches **VOTG_SESS_VLD** max (4V) within **TA_VBUS_ATT** max (200ms) of end of last ADP probe.

a_wait_bcon ->**a_wait_vfall -> a_idle** resulting from **a_wait_bcon_tmout** and **a_wait_vfall_tmout.**

13. Check that VBUS goes below **VOTG_SESS_VLD** min (0.8V) within **TA_WAIT_BCON** max (30s or as re-defined by vendor) plus **TSSEND_LKG** max (1s).
14. Check that UUT performs an ADP probe within **TA_ADP_PRB**.

a_idle ->**a_wait_vrise** resulting from **a_srp_det.**

15. PET generates SRP pulse of 7.5ms (typ. **TB_DATA_PLS**).

a_wait_vrise ->**a_wait_bcon** resulting from **a_vbus_vld.**

16. Check VBUS reaches **VOTG_SESS_VLD** max (4V) within **TB_SRP_FAIL** max (6s).

a_wait_bcon ->**a_host** resulting from **b_conn.**

17. PET connects D+.
18. Check that UUT performs bus reset within **TA_BCON_ARST** max (30s).
19. Check that UUT enumerates PET (up to setting configuration 1) within **TTST_CONFIG** max (30s). PET declares itself as test device (VID=0x1A0A, PID=0x0200), with **bcdDevice** bit 0 set to a 0.

a_host ->**a_wait_bcon** ->**a_wait_vfall -> a_idle** resulting from **b_conn/, a_wait_bcon_tmout** and **a_wait_vfall_tmout.**

20. PET disconnects D+.
21. Wait 2s for this disconnection to be detected.

Repeat complete test at High Speed.

6.7.14.2 Paths not tested:

Any path resulting from **a_bus_drop or a_bus_drop/** (not practical).
Any path resulting from **a_wait_vrise_tmout** (not practical).
Any path resulting from **a_vbus_vld/** (not practical).
Any path resulting from **a_bus_req** or **a_bus_req/** (not practical).
a_suspend ->**a_wait_bcon.**

6.7.15 EH, Capable of ADP but not SRP, State Transition Test (Standard-A)

Purpose	This test verifies the UUT follows the correct transitions in the specified state diagrams.
Applies to	EHs capable of ADP but not SRP, using Standard-A receptacles.
Description	PET performs the necessary actions to force the UUT between each state transition, to ensure correct operation.
Test setup	Test setup 2 (See Section 6.3.2)
Preconditions	'A-UUT Initial Power-up Test' has previously been run to establish the initial conditions for this test. A capacitance of 10µF and a pull-down resistance of 10kΩ are connected across VBUS.
Checklist	ST2

6.7.15.1 Test Procedure

START ->**a_idle.**
(This was done in Power-Up Test).

First perform following test at Full Speed.

1. Start with cable still attached, PET applying 10µF capacitance and 10kΩ pull-down resistance between VBUS and ground, data lines not pulled up.
2. If VBUS is on, check for VBUS off within **TA_WAIT_BCON** max (30s, or as specified by vendor).

a_idle -> **a_wait_vrise** resulting from **adp_change.**

3. PET checks for ADP probe.
4. PET changes capacitance across VBUS to 1µF, leaving the pull-down resistor of **ROTG_VBUS** min (10kΩ) connected, to allow detection by ADP probe from UUT.
5. PET checks for further ADP probe.

a_wait_vrise ->**a_wait_bcon** resulting from **a_vbus_vld.**

6. Check VBUS reaches **VOTG_SESS_VLD** max (4V) within **TA_VBUS_ATT** max (200ms) of end of last ADP probe.

a_wait_bcon ->**a_wait_vfall -> a_idle** resulting from **a_wait_bcon_tmout** and **a_wait_vfall_tmout.**

7. Check that VBUS goes below **VOTG_SESS_VLD** min (0.8V) within **TA_WAIT_BCON** max (30s or as re-defined by vendor) plus **TSSEND_LKG** max (1s).
8. Check that UUT performs an ADP probe within **TA_ADP_PRB**.

a_idle -> **a_wait_vrise** resulting from **adp_change.**

9. PET checks for ADP probe.
10. PET changes capacitance across VBUS to 5.5µF, leaving the pull-down resistor of **ROTG_VBUS** min (10kΩ) connected, to VBUSto allow detection by ADP probe from UUT.
11. PET checks for further ADP probe.

a_wait_vrise ->**a_wait_bcon** resulting from **a_vbus_vld.**

12. Check VBUS reaches **VOTG_SESS_VLD** max (4V) within **TA_VBUS_ATT** max (200ms) of end of last ADP probe.

a_wait_bcon ->**a_wait_vfall -> a_idle** resulting from **a_wait_bcon_tmout** and **a_wait_vfall_tmout.**

13. Check that VBUS goes below **VOTG_SESS_VLD** min (0.8V) within **TA_WAIT_BCON** max (30s or as re-defined by vendor) plus **TSSEND_LKG** max (1s).
14. Check that UUT performs an ADP probe within **TA_ADP_PRB**.

a_idle -> **a_wait_vrise** resulting from **adp_change.**

15. PET checks for ADP probe.
16. PET changes capacitance across VBUS to 10µF, leaving the pull-down resistor of **ROTG_VBUS** min (10kΩ) connected, to VBUSto allow detection by ADP probe from UUT.
17. PET checks for further ADP probe.

a_wait_vrise ->**a_wait_bcon** resulting from **a_vbus_vld.**

18. Check VBUS reaches **VOTG_SESS_VLD** max (4V) within **TA_VBUS_ATT** max (200ms) of end of last ADP probe.

a_wait_bcon ->**a_host** resulting from **b_conn.**

19. PET connects D+.
20. Check that UUT performs bus reset within **TA_BCON_ARST** max (30s).
21. Check that UUT enumerates PET (up to setting configuration 1) within **TTST_CONFIG** max (30s). PET declares itself as test device (VID=0x1A0A, PID=0x0200), with **bcdDevice** bit 0 set to a 0.

a_host ->**a_wait_bcon** ->**a_wait_vfall -> a_idle** resulting from **b_conn/, a_wait_bcon_tmout** and **a_wait_vfall_tmout.**

22. PET disconnects D+.
23. Wait 2s for this disconnection to be detected.

Repeat complete test at High Speed.

6.7.15.2 Paths not tested:

Any path resulting from **a_bus_drop or a_bus_drop/** (not practical).
Any path resulting from **a_wait_vrise_tmout** (not practical).
Any path resulting from **a_vbus_vld/** (not practical).
Any path resulting from **a_bus_req** or **a_bus_req/** (not practical).
a_suspend ->**a_wait_bcon.**

6.7.16 EH, Capable of SRP but not ADP, State Transition Test (Standard-A)

Purpose	This test verifies the UUT follows the correct transitions in the specified state diagrams.
Applies to	EHs, capable of SRP but not ADP, using Standard-A receptacles.
Description	PET performs the necessary actions to force the UUT between each state transition, to ensure correct operation.
Test setup	Test setup 2 (See Section 6.3.2)
Preconditions	'A-UUT Initial Power-up Test' has previously been run to establish the initial conditions for this test. A capacitance of 10µF and a pull-down resistance of 10kΩ are connected across VBUS.
Checklist	ST2

6.7.16.1 Test Procedure

START ->**a_idle.**
(This was done in Power-Up Test).

First perform following test at Full Speed.

1. Start with cable still attached, PET applying 10µF capacitance and 10kΩ pull-down resistance between VBUS and ground, data lines not pulled up.
2. If VBUS is on, check for VBUS off within **TA_WAIT_BCON** max (30s, or as specified by vendor).

a_idle ->**a_wait_vrise** resulting from **a_srp_det.**

3. PET generates SRP pulse of 7.5ms (typ. **TB_DATA_PLS**).

a_wait_vrise ->**a_wait_bcon** resulting from **a_vbus_vld.**

4. Check VBUS reaches **VOTG_SESS_VLD** max (4V) within **TB_SRP_FAIL** max (6s).

a_wait_bcon ->**a_wait_vfall -> a_idle** resulting from **a_wait_bcon_tmout** and **a_wait_vfall_tmout.**

5. Check that VBUS goes below **VOTG_SESS_VLD** min (0.8V) within **TA_WAIT_BCON** max (30s or as re-defined by vendor) plus **TSSEND_LKG** max (1s).
6. Wait **TB_SSEND_SRP** min (1.5s).

a_idle ->**a_wait_vrise** resulting from **a_srp_det.**

7. PET generates SRP pulse of 7.5ms (typ. **TB_DATA_PLS**).

a_wait_vrise ->**a_wait_bcon** resulting from **a_vbus_vld.**

8. Check VBUS reaches **VOTG_SESS_VLD** max (4V) within **TB_SRP_FAIL** max (6s).

a_wait_bcon ->**a_host** resulting from **b_conn.**

9. PET connects D+.
10. Check that UUT performs bus reset within **TA_BCON_ARST** max (30s).

11. Check that UUT enumerates PET (up to setting configuration 1) within **TTST_CONFIG** max (30s). PET declares itself as test device (VID=0x1A0A, PID=0x0200), with **bcdDevice** bit 0 set to a 0.

a_host ->**a_wait_bcon** ->**a_wait_vfall -> a_idle** resulting from **b_conn/, a_wait_bcon_tmout** and **a_wait_vfall_tmout.**

12. PET disconnects D+.
13. Wait 2s to allow disconnection to be detected.

Repeat complete test at High Speed.

6.7.16.2 Paths not tested:

Any path resulting from **a_bus_drop or a_bus_drop/** (not practical).
Any path resulting from **a_wait_vrise_tmout** (not practical).
Any path resulting from **a_vbus_vld/** (not practical).
Any path resulting from **a_bus_req** or **a_bus_req/** (not practical).
a_suspend ->**a_wait_bcon.**

6.7.17 EH with no Session Support State Transition Test (Standard-A)

Purpose	This test verifies the UUT follows the correct transitions in the specified state diagrams.
Applies to	EH devices which do not support sessions, using Standard-A receptacles.
Description	PET performs the necessary actions to force the UUT between each state transition, to ensure correct operation.
Test setup	UUT remains connected to PET via special test cable.
Preconditions	'A-UUT Initial Power-up Test' has previously been run to establish the initial conditions for this test.
Parameters	
Checklist	ST2
Pass Criteria	All checks specified in tests are satisfied.

Note: Where necessary, **a_bus_req** is assumed to be *true* to force VBUS to be switched on automatically.

6.7.17.1 Test Procedure

START -> **a_idle** -> **a_wait_vrise** -> **a_wait_bcon** resulting from powering on
(This was done in Power-Up Test)

First perform following test at Full Speed.

1. Start with cable still attached, PET applying 10µF capacitance and 10kΩ pull-down resistance between VBUS and ground, data lines not pulled up.
2. Check that VBUS is above **VOTG_SESS_VLD** max (4V).

a_wait_bcon -> **a_host** resulting from **b_conn**

3. PET connects using D+.
4. Check that UUT performs bus reset within **TA_BCON_ARST** max (30 sec)
5. Check that UUT enumerates PET (up to setting configuration 1) within **TTST_CONFIG** max (30 sec). PET declares itself as test device (VID=0x1A0A, PID=0x0200), with bcdDevice bit 0 set to a 0.

a_host -> **a_wait_bcon** -> **a_host** resulting from **b_conn/** followed by **b_conn**

6. PET disconnects D+
7. PET waits less than **TA_WAIT_BCON** min (1.1 sec minus .1 seconds = 1 second).
8. PET connects D+.
9. Check that UUT performs bus reset within **TA_BCON_ARST** max (30 sec)
10. Check that UUT enumerates PET (up to setting configuration 1) within **TTST_CONFIG** max (30 sec). PET declares itself as test device (VID=0x1A0A, PID=0x0200), with bcdDevice bit 0 set to a 0.

a_host -> **a_wait_bcon** resulting from **b_conn/**

11. PET disconnects D+
12. If first pass wait 5s.

Repeat complete test at High Speed

13. Wait 45s, while checking that VBUS remains on.

End of Test

6.7.17.2 Paths not tested:

Any path resulting from **a_bus_drop or a_bus_drop/** (not practical).
Any path resulting from **a_wait_vrise_tmout** (not practical).
Any path resulting from **a_vbus_vld/** (not practical).
Any path involving **a_suspend** (not practical).

6.7.18 EH, Capable of ADP and SRP, (Micro-AB) or OTG-A , Capable of ADP and SRP but not HNP, State Transition Test

Purpose	This test verifies the UUT follows the correct transitions in the specified state diagrams.
Applies to	EHs, capable of both ADP and SRP, using Micro-AB receptacles, or OTG-A devices, capable of both ADP and SRP, but not HNP.
Description	PET performs the necessary actions to force the UUT between each state transition, to ensure correct operation.
Test setup	Test setup 2 (See Section 6.3.2)
Preconditions	'A-UUT Initial Power-up Test' has previously been run to establish the initial conditions for this test. A capacitance of 10µF and a pull-down resistance of 10kΩ are connected across VBUS.
Checklist	ST2, E9b

6.7.18.1 Test Procedure

START ->**a_idle.**
(This was done in Power-Up Test).

First perform following test at Full Speed.

1. Start with cable still attached, PET applying 10µF capacitance and 10kΩ pull-down resistance between VBUS and ground, data lines not pulled up.
2. If VBUS is on, check for VBUS off within **TA_WAIT_BCON** max (30s, or as specified by vendor).

a_idle -> **a_wait_vrise** resulting from **adp_change.**

3. PET checks for ADP probe.
4. PET changes capacitance across VBUS to 1µF, leaving the pull-down resistor of **ROTG_VBUS** min (10kΩ) connected, to allow detection by ADP probe from UUT.
5. PET checks for further ADP probe.

a_wait_vrise ->**a_wait_bcon** resulting from **a_vbus_vld.**

6. Check VBUS reaches **VOTG_SESS_VLD** max (4V) within **TA_VBUS_ATT** max (200ms) of end of last ADP probe.

a_wait_bcon ->**a_wait_vfall -> a_idle** resulting from **a_wait_bcon_tmout** and **a_wait_vfall_tmout.**

7. Check that VBUS goes below **VOTG_SESS_VLD** min (0.8V) within **TA_WAIT_BCON** max (30s or as re-defined by vendor) plus **TSSEND_LKG** max (1s).
8. Check that UUT performs an ADP probe within **TA_ADP_PRB**.

a_idle -> **a_wait_vrise** resulting from **adp_change.**

9. PET checks for ADP probe.

10. PET changes capacitance across VBUS back to 10µF, leaving the pull-down resistor of **ROTG_VBUS** min (10kΩ) connected, to VBUSto allow detection by ADP probe from UUT.
11. PET checks for further ADP probe.

a_wait_vrise ->**a_wait_bcon** resulting from **a_vbus_vld.**

12. Check VBUS reaches **VOTG_SESS_VLD** max (4V) within **TA_VBUS_ATT** max (200ms) of end of last ADP probe.

a_wait_bcon ->**a_wait_vfall -> a_idle** resulting from **a_wait_bcon_tmout** and **a_wait_vfall_tmout.**

13. Check that VBUS goes below **VOTG_SESS_VLD** min (0.8V) within **TA_WAIT_BCON** max (30s or as re-defined by vendor) plus **TSSEND_LKG** max (1s).
14. Check that UUT performs an ADP probe within **TA_ADP_PRB**.

a_idle ->**a_wait_vrise** resulting from **a_srp_det.**

15. PET generates SRP pulse of 7.5ms (typ. **TB_DATA_PLS**).

a_wait_vrise ->**a_wait_bcon** resulting from **a_vbus_vld.**

16. Check VBUS reaches **VOTG_SESS_VLD** max (4V) within **TB_SRP_FAIL** max (6s).

a_wait_bcon ->**a_host** resulting from **b_conn.**

17. PET connects D+.
18. Check that UUT performs bus reset within **TA_BCON_ARST** max (30s).
19. Check that UUT enumerates PET (up to setting configuration 1) within **TTST_CONFIG** max (30s). PET declares itself as test device (VID=0x1A0A, PID=0x0200), with **bcdDevice** bit 0 set to a 0.

a_host ->**a_wait_vfall** ->**a_idle** ->**b_idle** resulting from **id** and **a_wait_vfall_tmout.**

20. PET disconnects D+ and ID.
21. Check that VBUS goes below **VOTG_SESS_VLD** min (0.8V) within **TSSEND_LKG** max (1s)

b_idle ->**a_idle** resulting from **id/.**

22. Connect ID pin.
23. Wait for VBUS to remain off for 5s, as behavior after changing state of ID pin is not well defined.

Repeat complete test at High Speed.

6.7.18.2 Paths not tested:

Any path resulting from **a_bus_drop or a_bus_drop/** (not practical).
Any path resulting from **a_wait_vrise_tmout** (not practical).
Any path resulting from **a_vbus_vld/** (not practical).
Any path resulting from **a_bus_req** or **a_bus_req/** (not practical).
a_suspend ->**a_wait_bcon.**

6.7.19 EH, Capable of ADP but not SRP, (Micro-AB) or OTG-A , Capable of ADP but not SRP or HNP, State Transition Test

Purpose	This test verifies the UUT follows the correct transitions in the specified state diagrams.
Applies to	EHs capable of ADP but not SRP, using Micro-AB receptacles, or OTG-A devices, capable of ADP but not SRP or HNP.
Description	PET performs the necessary actions to force the UUT between each state transition, to ensure correct operation.
Test setup	Test setup 2 (See Section 6.3.2)
Preconditions	'A-UUT Initial Power-up Test' has previously been run to establish the initial conditions for this test. A capacitance of 10µF and a pull-down resistance of 10kΩ are connected across VBUS.
Checklist	ST2, E9b

6.7.19.1 Test Procedure

START ->**a_idle.**
(This was done in Power-Up Test).

First perform following test at Full Speed.

1. Start with cable still attached, PET applying 10µF capacitance and 10kΩ pull-down resistance between VBUS and ground, data lines not pulled up.
2. If VBUS is on, check for VBUS off within **TA_WAIT_BCON** max (30s, or as specified by vendor).

a_idle -> **a_wait_vrise** resulting from **adp_change.**

3. PET checks for ADP probe.
4. PET changes capacitance across VBUS to 1µF, leaving the pull-down resistor of **ROTG_VBUS** min (10kΩ) connected, to allow detection by ADP probe from UUT.
5. PET checks for further ADP probe.

a_wait_vrise ->**a_wait_bcon** resulting from **a_vbus_vld.**

6. Check VBUS reaches **VOTG_SESS_VLD** max (4V) within **TA_VBUS_ATT** max (200ms) of end of last ADP probe.

a_wait_bcon ->**a_wait_vfall -> a_idle** resulting from **a_wait_bcon_tmout** and **a_wait_vfall_tmout.**

7. Check that VBUS goes below **VOTG_SESS_VLD** min (0.8V) within **TA_WAIT_BCON** max (30s or as re-defined by vendor) plus **TSSEND_LKG** max (1s).
8. Check that UUT performs an ADP probe within **TA_ADP_PRB**.

a_idle -> **a_wait_vrise** resulting from **adp_change.**

9. PET checks for ADP probe.

10. PET changes capacitance across VBUS to 5.5µF, leaving the pull-down resistor of **ROTG_VBUS** min (10kΩ) connected, to VBUSto allow detection by ADP probe from UUT.
11. PET checks for further ADP probe.

a_wait_vrise ->**a_wait_bcon** resulting from **a_vbus_vld.**

12. Check VBUS reaches **VOTG_SESS_VLD** max (4V) within **TA_VBUS_ATT** max (200ms) of end of last ADP probe.

a_wait_bcon ->**a_wait_vfall -> a_idle** resulting from **a_wait_bcon_tmout** and **a_wait_vfall_tmout.**

13. Check that VBUS goes below **VOTG_SESS_VLD** min (0.8V) within **TA_WAIT_BCON** max (30s or as re-defined by vendor) plus **TSSEND_LKG** max (1s).
14. Check that UUT performs an ADP probe within **TA_ADP_PRB**.

a_idle -> **a_wait_vrise** resulting from **adp_change.**

15. PET checks for ADP probe.
16. PET changes capacitance across VBUS to 10µF, leaving the pull-down resistor of **ROTG_VBUS** min (10kΩ) connected, to VBUSto allow detection by ADP probe from UUT.
17. PET checks for further ADP probe.

a_wait_vrise ->**a_wait_bcon** resulting from **a_vbus_vld.**

18. Check VBUS reaches **VOTG_SESS_VLD** max (4V) within **TA_VBUS_ATT** max (200ms) of end of last ADP probe.

a_wait_bcon ->**a_host** resulting from **b_conn.**

19. PET connects D+.
20. Check that UUT performs bus reset within **TA_BCON_ARST** max (30s).
21. Check that UUT enumerates PET (up to setting configuration 1) within **TTST_CONFIG** max (30s). PET declares itself as test device (VID=0x1A0A, PID=0x0200), with **bcdDevice** bit 0 set to a 0.

a_host ->**a_wait_vfall** ->**a_idle** ->**b_idle** resulting from **id** and **a_wait_vfall_tmout.**

22. PET disconnects D+ and ID.
23. Check that VBUS goes below **VOTG_SESS_VLD** min (0.8V) within **TSSEND_LKG** max (1s)

b_idle ->**a_idle** resulting from **id/.**

24. Connect ID pin.
25. Wait for VBUS to remain off for 5s, as behavior after changing state of ID pin is not well defined.

Repeat complete test at High Speed.

6.7.19.2 Paths not tested:

Any path resulting from **a_bus_drop or a_bus_drop/** (not practical).
Any path resulting from **a_wait_vrise_tmout** (not practical).
Any path resulting from **a_vbus_vld/** (not practical).
Any path resulting from **a_bus_req** or **a_bus_req/** (not practical).
a_suspend ->**a_wait_bcon.**

6.7.20 EH, Capable of SRP but not ADP, (Micro-AB) or OTG-A , Capable of SRP but not ADP or HNP, State Transition Test

Purpose	This test verifies the UUT follows the correct transitions in the specified state diagrams.
Applies to	EHs, capable of SRP but not ADP, using Micro-AB receptacles, or OTG-A devices, capable of SRP but not ADP or HNP, State Transition Test
Description	PET performs the necessary actions to force the UUT between each state transition, to ensure correct operation.
Test setup	Test setup 2 (See Section 6.3.2)
Preconditions	'A-UUT Initial Power-up Test' has previously been run to establish the initial conditions for this test. A capacitance of 10µF and a pull-down resistance of 10kΩ are connected across VBUS.
Checklist	ST2, E9a, E9b

6.7.20.1 Test Procedure

START ->**a_idle.**
(This was done in Power-Up Test).

First perform following test at Full Speed.

1. Start with cable still attached, PET applying 10µF capacitance and 10kΩ pull-down resistance between VBUS and ground, data lines not pulled up.
2. If VBUS is on, check for VBUS off within **TA_WAIT_BCON** max (30s, or as specified by vendor).

a_idle ->**a_wait_vrise** resulting from **a_srp_det.**

3. PET generates SRP pulse of 7.5ms (typ. **TB_DATA_PLS**).

a_wait_vrise ->**a_wait_bcon** resulting from **a_vbus_vld.**

4. Check VBUS reaches **VOTG_SESS_VLD** max (4V) within **TB_SRP_FAIL** max (6s).

a_wait_bcon ->**a_wait_vfall -> a_idle** resulting from **a_wait_bcon_tmout** and **a_wait_vfall_tmout.**

5. Check that VBUS goes below **VOTG_SESS_VLD** min (0.8V) within **TA_WAIT_BCON** max (30s or as re-defined by vendor) plus **TSSEND_LKG** max (1s).
6. Wait **TB_SSEND_SRP** min (1.5s).

a_idle ->**a_wait_vrise** resulting from **a_srp_det.**

7. PET generates SRP pulse of 7.5ms (typ. **TB_DATA_PLS**).

a_wait_vrise ->**a_wait_bcon** resulting from **a_vbus_vld.**

8. Check VBUS reaches **VOTG_SESS_VLD** max (4V) within **TB_SRP_FAIL** max (6s).

a_wait_bcon ->**a_host** resulting from **b_conn.**

9. PET connects D+.

10. Check that UUT performs bus reset within **TA_BCON_ARST** max (30s).
11. Check that UUT enumerates PET (up to setting configuration 1) within **TTST_CONFIG** max (30s). PET declares itself as test device (VID=0x1A0A, PID=0x0200), with **bcdDevice** bit 0 set to a 0.

a_host ->**a_wait_vfall** ->**a_idle** ->**b_idle** resulting from **id** and **a_wait_vfall_tmout.**

12. PET disconnects D+ and ID.
13. Check that VBUS goes below **VOTG_SESS_VLD**min (0.8V) within **TSSEND_LKG**max (1s).

b_idle ->**a_idle** resulting from **id/.**

14. Connect ID pin to ground.
15. Check that VBUS goes above **VOTG_SESS_VLD** max (4V) **TA_VBUS_ATT** max (200ms).
16. Wait for VBUS to remain off for 5s, as behavior after changing state of ID pin is not well defined.

Repeat complete test at High Speed.

6.7.20.2 Paths not tested:

Any path resulting from **a_bus_drop or a_bus_drop/** (not practical).
Any path resulting from **a_wait_vrise_tmout** (not practical).
Any path resulting from **a_vbus_vld/** (not practical).
Any path resulting from **a_bus_req** or **a_bus_req/** (not practical).
a_suspend ->**a_wait_bcon.**

6.7.21 EH with no Session Support State Transition Test (Micro-AB), or OTG-A with no Session or HNP Support.

Purpose	This test verifies the UUT follows the correct transitions in the specified state diagrams.
Applies to	EH devices which do not support sessions, using Micro-AB receptacles, or OTG-A devices with no Session or HNP Support.
Description	PET performs the necessary actions to force the UUT between each state transition, to ensure correct operation.
Test setup	UUT remains connected to PET via special test cable.
Preconditions	'A-UUT Initial Power-up Test' has previously been run to establish the initial conditions for this test.
Parameters	
Checklist	ST2, E9a, E9b
Pass Criteria	All checks specified in tests are satisfied.

Note: Where necessary, **a_bus_req** is assumed to be *true* to force VBUS to be switched on automatically.

6.7.21.1 Test Procedure

START -> **a_idle** -> **a_wait_vrise** -> **a_wait_bcon** resulting from powering on
(This was done in Power-Up Test)

First perform following test at Full Speed.

1. Start with cable still attached, PET applying 10µF capacitance and 10kΩ pull-down resistance between VBUS and ground, data lines not pulled up.
2. Check that VBUS is above **VOTG_SESS_VLD** max (4V).

a_wait_bcon -> **a_host** resulting from **b_conn**

3. PET connects using D+.
4. Check that UUT performs bus reset within **TA_BCON_ARST** max (30 sec)
5. Check that UUT enumerates PET (up to setting configuration 1) within **TTST_CONFIG** max (30 sec). PET declares itself as test device (VID=0x1A0A, PID=0x0200), with bcdDevice bit 0 set to a 0.

a_host -> **a_wait_bcon** -> **a_host** resulting from **b_conn/** followed by **b_conn**

6. PET disconnects D+
7. PET waits less than **TA_WAIT_BCON** min (1.1 sec minus .1 seconds = 1 second).
8. PET connects D+.
9. Check that UUT performs bus reset within **TA_BCON_ARST** max (30 sec)
10. Check that UUT enumerates PET (up to setting configuration 1) within **TTST_CONFIG** max (30 sec). PET declares itself as test device (VID=0x1A0A, PID=0x0200), with bcdDevice bit 0 set to a 0.

a_host -> **a_wait_vfall** -> **a_idle** -> **b_idle** resulting from **id** and **a_wait_vfall_tmout**

11. PET disconnects ID pin, then disconnects D+.

12. Check that VBUS goes below **VOTG_SESS_VLD** min (0.8V) within **TSSEND_LKG** max (1 sec).
13. Wait 1 second.

b_idle -> **a_idle** -> **a_wait_vrise** -> **a_wait_bcon** resulting from **id/**

14. PET connects ID pin to ground.
15. Check that VBUS is above **VOTG_SESS_VLD** max (4V) within **TA_VBUS_ATT** max (200ms).
16. If first pass wait 5s.

    Repeat complete test at High Speed
17. Wait 45s, while checking that VBUS remains on.

End of Test

6.7.21.2 Paths not tested:

Any path resulting from **a_bus_drop or a_bus_drop/** (not practical).
Any path resulting from **a_wait_vrise_tmout** (not practical).
Any path resulting from **a_vbus_vld/** (not practical).
Any path involving **a_suspend** (not practical).

6.7.22 A-UUT "Device No Response" for connection timeout

Purpose	This test verifies that an A-UUT produces a device not connected or not responding error message when an A-UUT bus request occurs and it is connected to a PET programmed to act like a non-responsive device.
Applies to	All Targeted Hosts.
Description	Generate an SRP pulse, but then fail to connect to the A-UUT. Check that a suitable error message is generated. For an A-UUT not supporting sessions, connect, but fail to respond to transactions.
Test setup	Test setup 1 or 2 (see Section 6.3)
Preconditions	'A-UUT Initial Power-up Test' has previously been run to establish the initial conditions for this test. A capacitance of 10µF and a pull-down resistance of 10kΩ are connected across VBUS.
Checklist	M6, MSG4, T11
Pass Criteria	Message "Device no response" or similar is displayed on UUT

6.7.22.1 Test Procedure for A-UUT which supports sessions

1. Start with cable still attached, PET applying 10µF capacitance and 10kΩ pull-down resistance between VBUS and ground, data lines not pulled up.
2. Check that VBUS is below **VOTG_SESS_VLD** min within **TA_WAIT_BCON** max (30s, or as specified by vendor) of start of test. Wait only until it is below **VOTG_SESS_VLD** min.
3. Wait **TB_SSEND_SRP** min (1.5s) after VBUS is below **VOTG_SESS_VLD** min.
4. PET generates 7.5ms SRP pulse.
5. Wait for VBUS to reach **VA_VBUS_AVG_LO** min (4.4V). This should occur within **TA_SRP_RSPNS** max (4.9s) plus **TA_VBUS_RISE** max (100ms) from rising edge of SRP pulse, so consider the test to have failed if the voltage is not reached after 6s.
6. Wait 5s.
7. Display Message "Click OK when 'Device No Response' indication displayed on UUT".
8. If operator clicks OK before 30s elapses since VBUS went on, then UUT passes test.
9. If 30s elapses first, then UUT fails test.
10. PET leaves 10µF capacitance and 10kΩ pull-down resistance across VBUS.
11. Wait 2s. to allow disconnection to be recognized.

End of Test.

6.7.22.2 Test Procedure for A-UUT which does not support sessions

1. Start with cable still attached, PET applying 10µF capacitance and 10kΩ pull-down resistance between VBUS and ground, data lines not pulled up.
2. Wait 1s.
3. PET connects using D+.
4. Display Message "Click OK when 'Device No Response' indication displayed on UUT".
5. If operator clicks OK before 30s elapses since VBUS went on, then UUT passes test.
6. If 30s elapses first, then UUT fails test.
7. PET leaves 10µF capacitance and 10kΩ pull-down resistance across VBUS.
8. PET disconnects D+.
9. Wait 2s. to allow disconnection to be recognized.

End of Test.

6.7.23 A-UUT "Unsupported Device" Message

Purpose	This test verifies that an A-UUT produces a device non-supported error message when a device it doesn't recognize, and does not support HNP, connects to it.
Applies to	All Targeted Hosts
Description	Get VBUS turned on, and connect to the A-UUT. Get enumerated and respond as an unknown device not supporting HNP. Check that a suitable error message is generated.
Test setup	Test setup 1 or 2 (see Section 6.3)
Preconditions	'A-UUT Initial Power-up Test' has previously been run to establish the initial conditions for this test. A capacitance of 10µF and a pull-down resistance of 10kΩ are connected across VBUS.
Checklist	TPL5, MSG1, MSG2, MSG3, T3, T10
Pass Criteria	Message "Unsupported Device"or similar is displayed on UUT

6.7.23.1 Test Procedure

1. Start with cable still attached, PET applying 10µF capacitance and 10kΩ pull-down resistance between VBUS and ground, data lines not pulled up.
2. Get VBUS turned on, using the method described in Section6.7.1.
3. Wait for almost **TB_SVLD_BCON** max (1s - 0.1s = 0.9s) from VBUS reaching **VOTG_SESS_VLD** max.
4. Connect PET using D+ pull-up.
5. Allow A-UUT to enumerate PET, responding with a VID / PID combination not on the TPL of the UUT and also with the OTG descriptor stating that it does not support HNP.
6. Start 30s timer when Device Descriptor is read.
7. Display Message "Click OK if 'Unsupported Device' indication displayed on UUT".
8. If operator clicks OK before 30s timer expires, then UUT passes test.
9. If 30selapses first, then UUT fails test.
10. PET disconnects by removing any termination on the data lines, but leaves a capacitance of 10µF and a pull-down resistance of 10kΩ connected across VBUS.
11. Wait 2s to allow disconnection to be detected.

End of Test.

6.7.24 A-UUT "Device No Response" for HNP enable

Purpose	This test verifies that an A-UUT offers the opportunity to an unsupported OTG device having HNP-capability, to become host. It also verifies that it produces a 'Device not Responding' error message when such a device connects, indicates HNP support, but STALLs the SetFeature(**b_hnp_enable)** request.
Applies to	All Targeted Hosts
Description	Connect to the A-UUT, get enumerated and indicate that HNP is supported. Stall the SetFeature(**b_hnp_enable)** request. Check that a suitable error message is generated.
Test setup	Test setup 1 or 2 (see Section 6.3)
Preconditions	'A-UUT Initial Power-up Test' has previously been run to establish the initial conditions for this test. A capacitance of 10µF and a pull-down resistance of 10kΩ are connected across VBUS.
Checklist	MSG1-4, T11
Pass Criteria	Message "Device no response" or similar is displayed on UUT

6.7.24.1 Test Procedure

1. Start with cable still attached, PET applying 10µF capacitance and 10kΩ pull-down resistance between VBUS and ground, data lines not pulled up.
2. Get VBUS turned on, using the method described in Section6.7.1.
3. Wait for almost **TB_SVLD_BCON** max (1s - 0.1s = 0.9s) from VBUS reaching **VOTG_SESS_VLD** max.
4. Connect using D+ pull-up.
5. Allow A-UUT to enumerate PET, responding with a VID/PID combination not on the TPL of the UUT,and also with the OTG descriptor stating that it supports HNP.
6. Respond to GetStatus(**OTG**) requests with Host Request Flag Set to a 1.
7. Check that A-UUT sends SetFeature(**b_hnp_enable)**, but respond to it with a STALL, and start 30s timer.
8. Display Message "Click OK if 'Device No Response' indication displayed on UUT".
9. If operator clicks OK before 30s timer expires, then UUT passes test.
10. If 30s elapses first, then UUT fails test.
11. PET disconnects by removing any termination on the data lines, but leaves a capacitance of 10µF and a pull-down resistance of 10kΩ connected across VBUS.
12. Wait 2s to allow disconnection to be detected.

End of Test.

6.7.25 EH using Micro-AB "Incorrect Connection"

Purpose	This test verifies that an EH using a Micro-AB receptable displays a message in response to seeing VBUS when the ID pin is not connected.
Applies to	EH equipped with a Micro-AB
Description	5V is applied to VBUS while ID is true. Check that a suitable error message is generated. Although strictly speaking this is a B-UUT test, it is included in the A-UUT tests so as to avoid having to run the B-UUT tests for an EH.
Test setup	Test setup 1 (see Section 6.3)
Preconditions	'A-UUT Initial Power-up Test' has previously been run to establish the initial conditions for this test. A capacitance of 10µF and a pull-down resistance of 10kΩ are connected across V_{BUS}.
Checklist	MSG11a
Pass Criteria	Message "Charging", "Incorrect connection" or similar is displayed on UUT

6.7.25.1 Test Procedure

1. Start with cable still attached, PET applying 10µF capacitance and 10kΩ pull-down resistance between V_{BUS} and ground, data lines not pulled up.
2. Disconnect ID pin from ground.
3. Wait for 1 second.
4. Check that V_{BUS} is not being applied.
5. Connect 5V to V_{BUS} and start a 30s timer.
6. Display Message "Click OK if 'Incorrect Connection' indication displayed on UUT".
7. If operator clicks OK before 30s timer expires, then UUT passes test.
8. If 30s elapses first, then UUT fails test.
9. PET disconnects 5V from V_{BUS}.
10. Wait for 1 second.
11. Reconnect ID pin to ground.
12. Wait for 2 seconds for ID pin to be recognised.

End of Test.

6.8 B-UUT Tests

The electrical tests in this section test only a partial list of all the possible electrical parameters. The tests should not be considered as a full validation test plan. It is the responsibility of the manufacturer of a device to verify compliance of all relevant electrical parameters specified in [USB2.0], [USBCables2.0], [USB 3.0] and [USBOTG&EHv2.0].

6.8.1 B-UUT Initial Power-up Test

Purpose	To ensure that the OTG B-device or Peripheral-only B-device has been powered up and is ready for the subsequent tests. All following B-device tests assume that this test has been run first. In the case of an ADP capable device, this test also confirms functional startup sequence.
Applies to	EH B-port, OTG B-device, Peripheral-only B-device
Description	This test will confirm that the correct cable has been attached, and arrange for the test operator to switch the UUT on. In the case of an ADP capable device, it will first get the UUT switched off. It will also confirm the commencement of ADP probing.
Test Setup	Test setup 1 or 2 (see Section 6.3)
Preconditions	None
Checklist	ADP13

6.8.1.1 Test Procedure

6.8.1.1.1 Part 1 – Common to All B-UUT Types

1. The user enters into the PET:
   - Whether the UUT is capable of ADP.

The test sequence followed depends on the UUT type:

- OTG B-device or peripheral-only B-device capable of ADP.
- OTG B-device or peripheral-only B-device not capable of ADP.

6.8.1.1.2 Part 2 – For OTGB-device or peripheral-only B-device UUT capable of ADP

2. Operator: Ensure UUT attached using Special Test Cable A (Test Setup 1 Section 6.3.1 for an OTG B-device, Test Setup 3 Section 6.3.3 for a Peripheral-only B-device/EH B-port) or, where the device does not have a Micro-AB or Micro-B receptacle, a suitable alternative.
3. UUT is either powered or is not powered. PET is not applying V_{BUS}, and not applying capacitance between V_{BUS} and ground, ID pin is not connected to ground.
4. Operator: Turn UUT off, if not already off.
5. Operator: Turn UUT on.
6. Check that UUT performs an ADP probe within T_{PWRUP_RDY} (30s or as specified by vendor).
7. To check probe, check that V_{BUS} goes below 0.3V and then rises above 0.5V within 10ms.
8. After the first probe check that either a further probe (or probes) is performed, or that D+ goes high. Wait here till D+ goes high or T_{PWRUP_RDY} times out.
9. Check that D+ stays high for at least 5ms.

10. Check that D+ goes low within 10ms of start of pulse.
11. Check ADP probe is not performed for **TB_SRP_FAIL** min (5s) after start of D+ (SRP) pulse.
12. Check that ADP probe is performed within **TB_SRP_FAIL** max plus **TB_ADP_PRB** max (6.0 + 2.6 = 8.6s) after start of D+ (SRP) pulse.
13. Now ready for any other B-UUT test.

6.8.1.1.3 Part 2 – For OTGB-device or Peripheral-only B-device UUT not capable of ADP

2. Operator: Ensure UUT attached using Special Test Cable A ((Test Setup 1 Section 6.3.1 for an OTG B-device, Test Setup 3 Section 6.3.3 for a Peripheral-only B-device/EH B-port) or, where the device does not have a Micro-AB or Micro-B receptacle, a suitable alternative.
3. UUT is either powered or is not powered. PET is not applying VBUS, and not applying capacitance between VBUS and ground, ID pin is not connected to ground.
4. Operator: Turn UUT on, if not already on.
5. PET applies **CADP_VBUS** max (6.5µF) and a pull-down resistor of **ROTG_VBUS** min (10kΩ) to VBUS and turns on VBUS.
6. Check that D+ goes high within **TPWRUP_RDY** (30s).
7. Turn off VBUS and disconnect capacitance and pull-down resistance from VBUS.
8. Wait 5s to allow disconnection to be detected.
9. Now ready for any other B-UUT test.

6.8.1.1.4 Following Tests

From now on all test sequences must start and finish with the PET holding VBUS off, and no capacitance or pull-down resistance connected to VBUS. This allows the tests to be performed in any sequence. As the tests are all on B-UUTs, the ID pin is not connected to ground in any test (except as appropriate in state transition tests).

6.8.2 B-UUT VBUS Voltage and Current Measurements

Purpose	To verify **VB_VBUS** min and max, **IB_UNCFG** and the declared value of **bMaxPower**.
Applies to	EH B-port, OTG B-device, Peripheral-only B-device
Description	Test measures the unconfigured and configured current at **VB_VBUS** min and **VB_VBUS** max. It also tests to ensure that the configured current is less than **bMaxPower**(part of the bmAttributes field of the Standard Configuration Descriptor as defined in [USB2.0] or [USB 3.0]).
Test Setup	Test setup 1 or 2 (see Section 6.3)
Preconditions	'B-UUT Initial Power-up Test' has previously been run to establish the initial conditions for this test. It is expected that the value of **bMaxPower** is known from **[USBOTG&EHChecklist]**.
Checklist	E11, E12, M5, ST4

6.8.2.1 Test procedure

1. The user enters the value for **bMaxPower** into the PET, which can be from 0mA to 500mA.
2. Cable is already attached with the B-device powered up. The PET is not applying VBUS, and not applying capacitance or pull-down resistance between VBUS and ground.
3. Check that UUT is not sourcing VBUS.
4. PET applies **CADP_VBUS** max (6.5µF) and a pull-down resistor of **ROTG_VBUS** min (10kΩ) to VBUS and turns on VBUS to **VB_VBUS** min (4.0V) (this is also **VOTG_SESS_VLD** max), plus an allowance for special cable resistance at a current of **bMaxPower** declared by the vendor.
5. Check that D+ goes high within 5s. We expect it to connect within **TB_SVLD_BCON** (1s).
6. Wait 100ms then apply a bus reset to the B-UUT.
7. Check current drawn <= **IB_UNCFG** (2.5mA) averaged over 1s (**TAVG_VBUS**).
8. Enumerate, checking for valid responses, check that the declared **bMaxPower** matches that specified on checklist. SetConfiguration(1).
9. Check VBUS current <= **bMaxPower**.
10. Change VBUS voltage to **VB_VBUS** max (6.0V).
11. Wait **TA_BCON_LDB** (100ms) then issue a bus reset to the B-UUT.
12. Check **IB_UNCFG**<= 2.5mA.
13. Enumerate, checking for valid responses, then SetConfiguration(1).
14. Check VBUS current <= **bMaxPower**.
15. Turn off VBUS and disconnect capacitance and pull-down resistance from VBUS.
16. Wait 5s to allow disconnection to be detected.
17. PET applies **CADP_VBUS** max (6.5µF) and a pull-down resistor of **ROTG_VBUS** min (10kΩ) to VBUS and turns on VBUS to slightly less than **VOTG_SESS_VLD** min (0.8V minus .02V = 0.78V).
18. Check that neither D+ nor D- goes high within the next **TB_SVLD_BCON** max (1s). If D+ does goes high (owing to ADP interpreting VBUS as a capacitance change and performing SRP), then check that it goes off within 10ms.
19. Turn off VBUS and disconnect capacitance and pull-down resistance from VBUS.
20. Wait 5s to allow disconnection to be detected.

End of test.

6.8.3 B-UUT Bypass Capacitance

Purpose	To verify OTG B-device , EH B-port or peripheral-only B-device VBUS bypass capacitance (**CRPB** and/or **CADP_VBUS**)
Applies to	EH B-port, OTG B-device, Peripheral-only B-device
Description	Uses a technique similar to ADP to measure the B-UUT bypass capacitance.
Test Setup	Test setup 1 or 2 (see Section 6.3)
Preconditions	'B-UUT Initial Power-up Test' has previously been run to establish the initial conditions for this test.
Checklist	E14, ADP19, M5, ST4

6.8.3.1 Test procedure

1. Cable is already attached with the B-device powered up. The PET is not applying VBUS, and not applying capacitance or pull-down resistance between VBUS and ground.
2. Check that UUT is not sourcing VBUS.
3. PET applies **CADP_VBUS** max (6.5µF) and a pull-down resistor of **ROTG_VBUS** min (10kΩ) to VBUSand turns on VBUS to 5V.
4. Check that D+ goes high within 5s. We expect it to connect within **TB_SVLD_BCON** (1s).
5. Wait 100ms then issue a bus reset to the B-UUT.
6. Enumerate, checking for valid responses, check that the declared **bMaxPower** matches that specified on checklist. SetConfiguration(1).
7. Turn off VBUS and disconnect capacitance from VBUS.
8. Wait 1s for VBUS to decay.
9. Disconnect pull-down resistance from VBUS.
   - Use ADP circuit to evaluate capacitance using rise time.

     Note: The UUT should not perform any ADP probes within **TB_ADP_DETACH** min (3s) of VBUS going off, and should hold off doing any while the PET carries out simulated ADP probes. A check after the PET test ensures that this is the case, confirming that the PET measurements are valid.
10. If the B-UUT is ADP capable, check the B-UUT's capacitance is greater than or equal to **CADP_VBUS** min (1µF), and less than or equal to C_{ADP_VBUS} max (6.5µF). If the B-UUT is not ADP capable, check that the capacitance is greater than or equal to **CRPB** min (1µF), and less than or equal to **CRPB** max (10µF).
11. Check that no ADP probe occurs within a **TB_ADP_DETACH** min (3s) of the last simulated ADP probe from the PET.
12. Wait 2s to allow disconnection to be detected.

End of Test.

6.8.4 B-UUT SRP

Purpose	This test will check that the B-device generates SRP requests, after a session.
Applies to	EH B-ports, OTG B-devices, Peripheral-only B-devices
Description	Uses SetFeature(**otg_srp_reqd)** to trigger the B-UUT to perform SRP. Verifies that all SRP related parameters are within limits.
Test Setup	Test setup 1 or 2 (see Section 6.3)
Preconditions	'B-UUT Initial Power-up Test' has previously been run to establish the initial conditions for this test.
Checklist	DF1-4, M5, SRP9, SRP10, SRP11, SRP12, T9

6.8.4.1 Test Procedure

1. Cable is already attached with the B-device powered up. The PET is not applying V_{BUS}, and not applying capacitance or pull-down resistance between V_{BUS} and ground.
2. Check that UUT is not sourcing V_{BUS}.
3. PET applies a pull-down resistor of R_{OTG_VBUS} min (10kΩ) to V_{BUS} and turns on V_{BUS} to 5V.
4. Check that D+ goes high within 5s. We expect it to connect within $T_{B\_SVLD\_BCON}$ (1s).
5. Wait $T_{A\_BCON\_LDB}$ min (100ms) then issue a bus reset to the B-UUT.
6. Enumerate, checking:
    a. Valid response to GetStatus(**OTG**) in default, addressed and configured states.
    b. Valid response to GetDescriptor(**Device**).
    c. Valid response to GetDescriptor(**Configuration**).
    d. OTG descriptor in configuration descriptor has valid fields.
    e. OTG descriptor in configuration descriptor declares SRP capability.
    f. Valid response to GetDescriptor(**String**) for declared strings.
    g. Valid response to GetDescriptor(**OTG**).
    h. Separate OTG descriptor has valid fields.
    i. Separate OTG descriptor declares SRP capability.
7. SetConfiguration(1).
8. SetFeature(**otg_srp_reqd).** This test mode feature bit requires the UUT to perform an SRP request within T_{TST_SRP} (5s) of V_{BUS} going off.
9. Wait 1s.
10. Disconnect V_{BUS} pull-down resistor, then turn off V_{BUS}.
11. Check that V_{BUS} goes below $V_{OTG\_VBUS\_LKG}$ max (0.7V), and that the fall in V_{BUS} from $V_{OTG\_SESS\_VLD}$ max (4V) to $V_{OTG\_VBUS\_LKG}$ (0.7V) occurs within T_{SSEND_LKG} (1s).

    Note: The fall time is now governed by the B-UUT using its own pull-down resistor to discharge its own capacitance, as the PET has disconnected its pull-down resistor.

12. When V_{BUS} is at 0.7V, check that SE0 is presented on data bus. Note time when it is.
13. Check that D+ is not asserted within $T_{B\_SE0\_SRP}$ (1s) of this time, or within $T_{B\_SSEND\_SRP}$ (1.5s) of V_{BUS} having gone below $V_{OTG\_SESS\_VLD}$ max (4V).
14. Check that D+ is asserted within T_{TST_SRP} (5s) of V_{BUS} going below $V_{OTG\_SESS\_VLD}$ min (0.8V). [This is a testability requirement initiated by **otg_srp_reqd**].
15. Check that D+ remains high for $T_{B\_DATA\_PLS}$ (5 to 10ms) (Pass 1 only).

16. Depending whether this is first or second pass through test PET applies a pull-down resistor of **ROTG_VBUS** min (10kΩ) to VBUS and turns on VBUS to 5V:
    a. slightly less than **TB_SRP_FAIL** max (5s minus 0.1s = 4.9s) after start of D+ pulse.
    b. immediately after start of D+ pulse.
17. Check that D+ goes high within **TB_SVLD_BCON** (1s) of VBUS reaching **VOTG_SESS_VLD** max.
18. Issue a bus reset, and enumerate the B-UUT. Check normal response.
19. Turn off VBUS and disconnect the pull-down resistance from VBUS.
20. Wait 5s to allow disconnection to be detected.
21. Repeat steps 1-20 using alternative timing in step 16.

End of Test.

6.8.5 B-UUT HNP

Purpose	This test will check that the B-device generates an HNP request, assumes the host role, and hands back control after a session.
Applies to	OTG B-devices
Description	Uses SetFeature(**'otg_hnp_reqd**) to trigger an HNP role transfer. Verifies that all HNP related parameters are within limits.
Test Setup	Test setup 1 or 2 (see Section 6.3)
Preconditions	'B-UUT Initial Power-up Test' has previously been run to establish the initial conditions for this test.
Checklist	DF1, DF2, DF15, DF17-19, DF22, DF23, HNP12-13, M5, ST4, T17

6.8.5.1 Test Procedure

1. Cable is already attached with the B-device powered up. The PET is not applying V_{BUS}, and not applying capacitance or pull-down resistance between V_{BUS} and ground.
2. Check that UUT is not sourcing V_{BUS}.
3. PET applies C_{ADP_VBUS} max (6.5µF) and a pull-down resistor of R_{OTG_VBUS} min (10kΩ) to V_{BUS} and turns on V_{BUS} to 5V.
4. Check that D+ goes high within 5s. We expect it to connect within $T_{B\_SVLD\_BCON}$ (1s).
5. Wait 100ms then issue a bus reset to the B-UUT.
6. Enumerate at speed depending on pass number (first two passes at Full Speed, last two passes at High Speed), checking:
    a. Valid response to GetStatus(**OTG**) in default and addressed states.
    b. Valid response to GetDescriptor(**Device**).
    c. Valid response to GetDescriptor(**Configuration**).
    d. OTG descriptor in configuration descriptor has valid fields.
    e. OTG descriptor in configuration descriptor declares HNP and SRP capability.
    f. Valid response to GetDescriptor(**String**) for declared strings.
    g. Valid response to GetDescriptor(**OTG**).
    h. Separate OTG descriptor has valid fields.
    i. Separate OTG descriptor declares HNP and SRP capability.
7. SetConfiguration(1).
8. GetStatus(**OTG**) Check valid response.
9. SetFeature(**'otg_hnp_reqd**). Check valid response. This test mode feature bit requires the UUT to set its Host Request Flag and to perform an HNP request within T_{TST_HNP} (5s).
10. Wait 1s.
11. GetStatus(**OTG**). Check valid response. Check that Host Request Flag is set.
12. SetFeature(**b_hnp_enable***).* Check valid response.
13. Attempt to ClearFeature(**b_hnp_enable***). Check valid STALL response.*
14. SetFeature(**b_hnp_enable***).* Check valid ACK response.
15. Wait 1s.
16. Stop sending SOFs.
17. If HS check when D+ goes high is within TWTREV (3 to 3.125ms). Allow margin for D+ rise time. If FS skip this check.

18. Check that B-device under test turns off D+ pull-up within $T_{B\_AIDL\_BDIS}$ max (150ms) of start of idle, but more than $T_{B\_FS\_BDIS}$ min (1ms). This also tests $T_{B\_FS\_BDIS}$ max.
19. Depending on which pass of the test:
    a. Wait for a notional very small value of $T_{A\_BDIS\_ACON}$ (1ms) from D+ going low [pass 1 and 3].
    b. Wait for slightly less than $T_{A\_BDIS\_ACON}$ max (150ms minus 1ms = 149ms) from D+ going low. [pass 2 and 4].
20. Turn on D+.
21. Check that we see start of a bus reset (SE0) within $T_{B\_ACON\_BSE0}$ (150ms) of D+ going high.
22. Allow PET to be enumerated by B-device under test (the PET identifying itself as PID=0x1A0A VID=0x0200). Even if the UUT does not support HNP Polling, the PET sets its HNP support bit. Check that enumeration was successful. If HNP polled, respond with Host Request Flag cleared.
23. Check that we are suspended within T_{TST_SUSP} (100ms) of the SetConfiguration(0) request. (if we are in HS this involves us in reverting to full speed).
24. Depending on which pass of the test:
    a. Wait for $T_{A\_BIDL\_ADIS}$ min (155ms), checking that D+ remains high (and D- low). [primary timing].
    b. Wait for slightly less than $T_{A\_BIDL\_ADIS}$ max (200ms minus 1ms = 199ms), checking that D+ remains high (and D- low). [alternative timing].
25. Remove D+ pull-up.
26. Wait T_{LDIS_DSCHG} min (25µs).
27. Check that D+ is pulled up by UUT within T_{TST_HNPEND}(5s).
28. Apply a bus reset (SE0), and check that we can enumerate the UUT successfully.
29. Suspend UUT.
30. Turn off V_{BUS} and disconnect capacitance and pull-down resistance from V_{BUS}.
31. Wait 5s to allow disconnection to be detected.
32. Repeat steps 1-30 with alternative timings in steps 18 and 23.
33. Repeat steps 1-30 at High Speed with primary timings in steps 18 and 23.
34. Repeat steps 1-30 at High Speed with alternative timings in steps 18 and 23.

End of Test.

6.8.6 B-UUT ADP

Purpose	This test will check that the B-device performs ADP probing and sensing.
Applies to	ADP-capable: EH B-ports, OTG B-devices, and Peripheral-only B-devices
Description	Exercises the B-UUT in order to verify all ADP-related parameters.
Test Setup	Test setup 1 or 2 (see Section 6.3)
Preconditions	'B-UUT Initial Power-up Test' has previously been run to establish the initial conditions for this test.
Checklist	ADP7-10, ADP12, ADP14, ADP22-25, ADP27-28

6.8.6.1 Test Procedure

1. Cable is already attached with the B-device powered up. The PET is not applying V_{BUS}, and not applying capacitance or pull-down resistance between V_{BUS} and ground. The B-UUT is assumed to be performing ADP probing.
2. Examine the next 11 ADP probes, as follows in steps 3-5, collecting data for validation.
3. Check V_{BUS} goes to V_{ADP_DSCHG} (0.15V) or below.
4. Detect V_{BUS} rising through 0.25V and then through 0.5V, record time in between, and also record point in time it passes 0.5V. This gives an estimate of the size of T_{ADP_RISE}.
5. Check that V_{BUS} reaches at least V_{ADP_PRB} min (0.6V) and check that it does not exceed V_{ADP_PRB} max (0.75V).
6. Validate each of the 10 periods $T_{B\_ADP\_PRB}$ (1.9 – 2.6s) or (0.85 – 1.3s), and check that the cycle to cycle jitter $T_{ADP\_PRB\_JTR}$ (5%) is within limits.
7. On first test pass, connect C_{ADP_VBUS} max (6.5µF) across V_{BUS}.
   On second test pass, connect C_{ADP_THR} max (900nF) across V_{BUS}.
   Ensure that this is connected between probes. (This should cause PET to be detected by next ADP probe.)
8. Check that V_{BUS} goes below V_{ADP_DSCHG} (0.15V) within 3s.
9. Detect V_{BUS} rising through 0.25V and then through 0.5V, record time in between.
10. On the first test pass, from the previous and the new values of rise time we can estimate I_{ADP_SRC} (1.1 - 1.65mA). Check that the difference in ramp time lies between 885µs and 1626µs. On second test pass, just report times.
11. Connect pull-down resistor of R_{OTG_VBUS} min (10kΩ) to V_{BUS}.
12. Check that D+ goes high within $T_{B\_ADP\_PRB\_SRP}$ max (5s). This is the start of an SRP pulse.
13. Check that D+ stays high for at least $T_{B\_DATA\_PLS}$ min (5ms).
14. Check that D+ goes low within $T_{B\_DATA\_PLS}$ max (10ms) of start of pulse.
15. Turn on V_{BUS}.
16. On connect, issue bus reset, and enumerate at Full Speed, checking:
    a. Valid response to GetDescriptor(**Device**).
    b. Valid response to GetDescriptor(**Configuration**).
    c. OTG descriptor in configuration descriptor has valid fields.
    d. OTG descriptor in configuration descriptor declares ADP and SRP capability.
    e. Valid response to GetDescriptor(**String**) for declared strings.
    f. Valid response to GetDescriptor(**OTG**).
    g. Separate OTG descriptor has valid fields.
    h. Separate OTG descriptor declares ADP and SRP capability.

i. Do not enable HNP.

17. SetConfiguration(1).
18. Suspend, then end session (VBUS off), and disconnect capacitance and pull-down resistance from VBUS.
19. Check that during the next 2.9s (**TB_ADP_DETACH** min minus 0.1s) the UUT does not perform any ADP probing.

Note: The PET is behaving out of spec here in order to measure **TB_ADP_DETACH.**

20. Do ADP probe.
21. Check that during the next **TB_ADP_DETACH** min (3s) the UUT does not perform any ADP probing.
22. Check that the UUT does a probe within **TB_ADP_DETACH** max (3.4s) plus **TB_SNSEND_PRB** max (100ms), a total of 3.5s, of last probe from PET.

Note: This demonstrated that the ADP sensing is working.

23. Disconnect.
24. Wait for 10s, ignoring any SRP pulses.
25. Repeat steps 2-24 using capacitance value of **CADP_THR** max (900nF) in step 7.
26. Connect (less than) **CADP_THR** min (150nF) across VBUS. Ensure that this is connected between probes. (This should **not** cause PET to be detected by next ADP probe).
27. Wait for 2 ADP probes, checking that D+ does not rise.
28. Disconnect capacitance. Ensure that this is disconnected between probes.
29. Wait for 2 ADP probes, checking that D+ does not rise.
30. Connect **CADP_VBUS** max (6.5µF) across VBUS.
31. Monitor resulting SRP pulse. Do not respond.
32. Check that ADP probe occurs within **TB_ADP_PRB** max (2.6s).
33. Disconnect capacitor.
34. Wait 10s, ignoring any SRP pulses.

End of Test.

6.8.7 B-UUT Leakage

Purpose	This test will measure **IVBUS_LKG_SRC** max (70µA)
Applies to	EH B-ports, OTG B-devices, Peripheral-only B-devices
Description	This test makes use of the ADP sense period to check the values of **IVBUS_LKG_SRC** and **ROTG_VBUS**.
Test Setup	Test setup 1 or 2 (see Section 6.3)
Preconditions	'B-UUT Initial Power-up Test' has previously been run to establish the initial conditions for this test.
Checklist	E10, ADP18, M5, ST4

6.8.7.1 Test Procedure

1. Cable is already attached with the B-device powered up. The PET is not applying VBUS, and not applying capacitance or pull-down resistance between VBUS and ground. The B-UUT may be performing ADP probing.
2. Check that UUT is not sourcing VBUS.
3. Turn VBUS on to **VB_VBUS** nom (5V) and simultaneously connect **CRPB** min (1µF) across VBUS.
4. Check that D+ goes high within **TB_SVLD_BCON** (1s) of VBUS reaching **VOTG_SESS_VLD** max (4.0V).
5. Wait TB_BCON_LDB (100ms) then issue a bus reset to the UUT.
6. Enumerate UUT, and SetConfiguration(1).
7. Switch off VBUS and remove VBUS capacitance, and apply 2kΩ pull-down resistance. We now have 3s before ADP is allowed from UUT.
8. Wait 1s.
9. Check that voltage on VBUS is below 140mV. This confirms that **IVBUS_LKG_SRC** is no more than 70µA.
10. Disconnect 2kΩpull-down resistor.
11. Connect 2k2Ω pull-up resistor, sourced from 0.8V, to VBUS.
12. Wait 1s.
13. Check that voltage on VBUS is greater than or equal to 0.656V. This proves that **ROTG_VBUS** is greater than or equal to 10kΩ.
14. Disconnect 2k2Ω pull-up resistor.
15. Wait 10s while ignoring any SRP pulse.

End of Test.

6.8.8 B-OTG, Capable of ADP/HNP/SRP, State Transition Test

Purpose	This test verifies the UUT follows the correct transitions in the specified state diagrams.
Applies to	OTG B-devices, capable of ADP, HNP and SRP.
Description	PET performs the necessary actions to force the UUT between each state transition, to ensure correct operation.
Test Setup	Test setup 1 or 2 (see Section 6.3)
Preconditions	'B-UUT Initial Power-up Test' has previously been run to establish the initial conditions for this test.
Checklist	ADP15, ST4

6.8.8.1 Test Procedure

START ->**b_idle.**
(This was done in Power-Up Test).

First perform following test at Full Speed.

1. No capacitance or pull-down resistance connected to V_{BUS}, ID pin not connected.
2. PET connects C_{ADP_VBUS} min (1µF) capacitor, and a pull-down resistor of R_{OTG_VBUS} min (10kΩ) from V_{BUS} to ground.
3. Wait 8s (ignoring SRP pulse resulting from capacitance change).

b_idle ->**b_peripheral** resulting from **b_sess_vld.**

4. PET turns on V_{BUS}.
5. Check that UUT connects using D+ within $T_{B\_SVLD\_BCON}$ (1s)**.**

b_peripheral ->**b_idle** resulting from **b_sess_vld/.**

6. PET turns off V_{BUS}.
7. Check that UUT disconnects D+ within T_{SSEND_LKG} max (1s).

b_idle ->**b_peripheral** resulting from **b_sess_vld.**

8. PET turns on V_{BUS}.
9. Check that UUT connects using D+ within $T_{B\_SVLD\_BCON}$ (1s).

b_peripheral ->**b_idle ->a_idle** resulting from **id/.**

10. PET turns off V_{BUS} (speeding up the fall time by the use of an additional 2kΩ pull-down resistor which is then disconnected), and then connects ID pin to ground.
11. Check that UUT disconnects D+ within 100ms (D+ should not remain on after V_{BUS} is off).
12. Check that UUT performs an ADP probe within 2s.

a_idle ->b_idle resulting from **id.**

13. PET disconnects ID pin from ground.
14. Check that an ADP probe is performed within 4s.
    Note: This allows the UUT to first perform ADP sensing if designed to do so under these conditions, or to continue with ADP probing but at the B-device rate.
15. Check that the next ADP probe is performed **TB_ADP_PRB** (1.9s to 2.6s OR 0.95s to 1.3s) later.

b_idle ->**b_peripheral** resulting from **b_sess_vld.**

16. PET turns on VBUS.
17. Check that UUT connects using D+ within **TB_SVLD_BCON** (1s).
18. PET issues a bus reset, and enumerates the UUT.

b_peripheral ->**b_wait_acon** resulting from **a_bus_suspend & b_bus_reqd & b_hnp_en.**

19. PET performs SetFeature(**'otg_hnp_reqd)**.
20. PET checks that Host Request Flag is set.
21. PET performs SetFeature(**b_hnp_enable**).
22. PET suspends UUT.
23. Check that D+ goes low within 150ms.

b_wait_acon ->**b_host** resulting from **a_conn.**

24. PET connects D+.
25. Check that UUT resets PET within **TB_ACON_BSE0** (150ms).
26. Check that UUT enumerates PET (up to setting configuration 1) within **TTST_CONFIG** (30s). PET declares itself as test device (VID=0x1A0A, PID=0x0200). If HNP polled, it responds with Host Request Flag set.

b_host ->**b_peripheral** resulting from **b_bus_req/.**

27. Check that PET is suspended within **TTST_SUSP** (100ms) of the SetConfiguration(0) request.
28. Wait **TA_BIDL_ADIS** min (155ms).
29. PET disconnects D+.
30. Wait **TLDIS_DSCHG** (25µs)
31. Check that D+ is pulled up by UUT within **TTST_HNPEND** (5s).
32. PET issues a bus reset, and enumerates the UUT.

(Repeating now with different **TA_BIDL_ADIS**).

b_peripheral ->**b_wait_acon** resulting from **a_bus_suspend.**

33. PET performs SetFeature(**'otg_hnp_reqd)**.
34. PET checks that Host Request Flag is set.
35. PET performs SetFeature(**b_hnp_enable**).
36. PET suspends UUT.

37. Check that D+ goes low within 150ms.

b_wait_acon ->**b_host** resulting from **a_conn.**

38. PET connects D+.
39. Check that UUT issues a bus reset within **TB_ACON_BSE0** (150ms).
40. Check that UUT enumerates PET (up to setting configuration 1) within **TTST_CONFIG** (30s). PET declares itself as test device (VID=0x1A0A, PID=0x0200). If HNP polled, it responds with Host Request Flag set.

b_host ->**b_peripheral** resulting from **b_bus_req/.**

41. Check that PET is suspended within **TTST_SUSP** (100ms) of the SetConfiguration(0) request.
42. Wait slightly less than **TA_BIDL_ADIS** max (i.e. 199ms).
43. PET disconnects D+.
44. Wait **TLDIS_DSCHG** (25µs)
45. Check that D+ is pulled up by UUT within **TTST_HNPEND** (5s).
46. PET issues a bus reset, and enumerates the UUT.

b_peripheral ->**b_wait_acon** resulting from **a_bus_suspend & b_bus_reqd & b_hnp_en.**

47. PET performs SetFeature(**'otg_hnp_reqd)**.
48. PET checks that Host Request Flag is set.
49. PET performs SetFeature(**b_hnp_enable**).
50. PET suspends UUT.
51. Check that D+ goes low within 150ms.

b_wait_acon ->**b_host** resulting from **a_conn.**

52. PET connects D+.
53. Check that UUT issues a bus reset within **TB_ACON_BSE0** (150ms).

b_host ->**b_peripheral** resulting from **a_conn/.**

54. PET disconnects D+.
55. Wait **TLDIS_DSCHG** (25µs).
56. Check that D+ is pulled up by UUT within **TTST_HNPEND** (5s).
57. PET issues a bus reset, and enumerates the UUT.

b_peripheral ->**b_wait_acon** resulting from **a_bus_suspend.**

58. PET performs SetFeature(**'otg_hnp_reqd)**.
59. PET checks that Host Request Flag is set.
60. PET performs SetFeature(**b_hnp_enable**).
61. PET suspends UUT.
62. Check that D+ goes low within 150ms.

b_wait_acon ->**b_idle** resulting from **b_sess_vld/.**

63. PET turns off VBUS.
64. Check that UUT performs ADP probe within 4s.

b_idle ->**b_peripheral** resulting from **b_sess_vld.**

65. PET turns on VBUS
66. Check that UUT connects using D+ within **TB_SVLD_BCON** (1s).
67. PET issues a bus reset, and enumerates the UUT. PET uses SetFeature(**otg_srp_reqd).**

b_peripheral ->**b_idle ->b_srp_init** resulting from **b_sess_vld/** and **b_bus_reqd & b_ssend_srp & b_se0_srp.**

68. PET turns off VBUS.
69. Check that UUT disconnects D+ within **TSSEND_LKG** max (1s).
70. Check that UUT performs SRP within **TTST_SRP** max (5s).

b_srp_init ->**b_idle** resulting from **b_srp_done.**

71. Check that UUT performs ADP probe within **TB_SRP_FAIL** max (6s) plus **TB_ADP_PRB** max (2.6s) plus small margin (total 9s).

b_idle ->**b_srp_init** resulting from **adp_change & b_ssend_srp & b_se0_srp.**

72. PET changes VBUS capacitance to **CADP_VBUS** max (6.5µF).
73. Check that UUT performs ADP probe within 2s.
74. Check that UUT performs SRP pulse within **TB_ADP_PRB_SRP** max (5s).

b_srp_init ->**b_idle** resulting from **b_srp_done.**

75. Check that UUT performs ADP probe within **TB_SRP_FAIL** max (6s) plus **TB_ADP_PRB** max (2.6s) plus small margin (total 9s).
76. PET disconnects capacitance and pull-down resistance from VBUS.
77. Wait 8s (ignoring SRP pulse).

End of Test.

Repeat test at High Speed.

6.8.8.2 Paths not tested:

Paths resulting from **id/** where VBUS is on, because **b_sess_vld/** will automatically result in the same transition.
Path from **b_srp_init** to **b_idle** resulting from **id/,** because not practical to distinguish from same transition resulting from **b_srp_done.**
Path from **b_wait_acon** ->**b_peripheral** resulting from **a_bus_resume or b_ase0_brst_tmout** because both these transitions involve time periods which are given no maximum value in [USBOTG&EHv2.0].

6.8.9 B-OTG, Capable of HNP and SRP, State Transition Test

Purpose	This test verifies the UUT follows the correct transitions in the specified state diagrams.
Applies to	OTG B-devices capable of HNP and SRP, but not ADP.
Description	PET performs the necessary actions to force the UUT between each state transition, to ensure correct operation.
Test Setup	Test setup 1 or 2 (see Section 6.3)
Preconditions	'B-UUT Initial Power-up Test' has previously been run to establish the initial conditions for this test.
Checklist	ST4

6.8.9.1 Test Procedure

START ->**b_idle.**
(This was done in Power-Up Test).

First perform following test at Full Speed.

1. No capacitance or pull-down resistance connected to VBUS, ID pin not connected.

b_idle ->**b_peripheral** resulting from **b_sess_vld.**

2. PET connects **CADP_VBUS** min (1µF) capacitor, and a pull-down resistor of **ROTG_VBUS** min (10kΩ) from VBUS to ground, and turns on VBUS
3. Check that UUT connects using D+ within **TB_SVLD_BCON** (1s).

b_peripheral ->**b_idle** resulting from **b_sess_vld/.**

4. PET turns off VBUS.
5. Check that UUT disconnects D+ within **TSSEND_LKG** max (1s).

b_idle ->**b_peripheral** resulting from **b_sess_vld.**

6. PET turns on VBUS
7. Check that UUT connects using D+ within **TB_SVLD_BCON** (1s).

b_peripheral ->**b_idle ->a_idle** resulting from **id/.**

8. PET turns off VBUS, pulling it down using a 2kΩ resistor, and connects ID pin to ground.
9. Check that UUT disconnects D+ within 100ms.
10. Wait 1s.

a_idle ->b_idle resulting from **id.**

11. PET disconnects ID pin from ground.
12. Wait 1s.

b_idle ->**b_peripheral** resulting from **b_sess_vld.**

13. PET turns on VBUS
14. Check that UUT connects using D+ within **TB_SVLD_BCON** (1s)
15. PET issues a bus reset, and enumerates the UUT.

b_peripheral ->**b_wait_acon** resulting from **a_bus_suspend & b_bus_reqd & b_hnp_en.**

16. PET performs SetFeature(**'otg_hnp_reqd)**.
17. PET checks that Host Request Flag is set.
18. PET performs SetFeature(**b_hnp_enable**).
19. PET suspends UUT.
20. Check that D+ goes low within **TB_AIDL_BDIS** (150ms).

b_wait_acon ->**b_host** resulting from **a_conn.**

21. PET connects D+
22. Check that UUT issues a bus reset to PET within **TB_ACON_BSE0** (150ms).
23. Check that UUT enumerates PET (up to setting configuration 1) within **TTST_CONFIG** (30s). PET declares itself as test device (VID=0x1A0A, PID=0x0200). If HNP polled, it responds with Host Request Flag set.

b_host ->**b_peripheral** resulting from **b_bus_req/.**

24. Check that PET is suspended within **TTST_SUSP**(100ms) of the SetConfiguration(0) request.
25. Wait **TA_BIDL_ADIS** min (155ms).
26. PET disconnects D+.
27. Wait **TLDIS_DSCHG** (25µs)
28. Check that D+ is pulled up by UUT within **TTST_HNPEND** (5s).
29. PET issues a bus reset, and enumerates the UUT.

(Repeating now with different **TA_BIDL_ADIS**).

b_peripheral ->**b_wait_acon** resulting from **a_bus_suspend**

30. PET performs SetFeature(**'otg_hnp_reqd)**.
31. PET checks that Host Request Flag is set.
32. PET performs SetFeature(**b_hnp_enable**).
33. PET suspends UUT.
34. Check that D+ goes low within 150ms.

b_wait_acon ->**b_host** resulting from **a_conn.**

35. PET connects D+
36. Check that UUT issues a bus reset within **TB_ACON_BSE0** (150ms).

37. Check that UUT enumerates PET (up to setting configuration 1) within **TTST_CONFIG** (30s). PET declares itself as test device (VID=0x1A0A, PID=0x0200). If HNP polled, it responds with Host Request Flag set.

b_host ->**b_peripheral** resulting from **b_bus_req/.**

38. Check that PET is suspended within **TTST_SUSP** (100ms) of the SetConfiguration(0) request.
39. Wait slightly less than **TA_BIDL_ADIS** max (i.e. 199ms).
40. PET disconnects D+.
41. Wait **TLDIS_DSCHG** (25µs).
42. Check that D+ is pulled up by UUT within **TTST_HNPEND** (5s).
43. PET issues a bus reset, and enumerates the UUT.

b_peripheral ->**b_wait_acon** resulting from **a_bus_suspend & b_bus_reqd & b_hnp_en**

44. PET performs SetFeature(**'otg_hnp_reqd)**.
45. PET checks that Host Request Flag is set.
46. PET performs SetFeature(**b_hnp_enable**).
47. PET suspends UUT.
48. Check that D+ goes low within **TB_AIDL_BDIS** (150ms).

b_wait_acon ->**b_host** resulting from **a_conn.**

49. PET connects D+
50. Check that UUT issues a bus reset within **TB_ACON_BSE0** (150ms).

b_host ->**b_peripheral** resulting from **a_conn/.**

51. PET disconnects D+.
52. Wait **TLDIS_DSCHG** (25µs)
53. Check that D+ is pulled up by UUT within **TTST_HNPEND** (5s).
54. PET issues a bus reset, and enumerates the UUT.

b_peripheral ->**b_wait_acon** resulting from **a_bus_suspend.**

55. PET performs SetFeature(**'otg_hnp_reqd)**.
56. PET checks that Host Request Flag is set.
57. PET performs SetFeature(**b_hnp_enable**).
58. PET suspends UUT.
59. Check that D+ goes low within 150ms.

b_wait_acon ->**b_idle** resulting from **b_sess_vld/.**

60. PET turns off VBUS.
61. Wait 1s.

b_idle ->**b_peripheral** resulting from **b_sess_vld.**

62. PET turns on VBUS.
63. Check that UUT connects using D+ within **TB_SVLD_BCON** (1s).
64. PET issues a bus reset, and enumerates the UUT. PET uses SetFeature(**otg_srp_reqd).**

b_peripheral ->**b_idle ->b_srp_init** resulting from **b_sess_vld/** and **b_bus_reqd & b_ssend_srp & b_se0_srp.**

65. PET turns off VBUS and disconnects capacitance and pull-down resistance from VBUS.
66. Check that UUT disconnects D+ within **TSSEND_LKG** max (1s).
67. Check that UUT performs SRP within **TTST_SRP** max (5s).

b_srp_init ->**b_idle** resulting from **b_srp_done.**

68. Wait 6s.

End of Test.

Repeat test at High Speed.

6.8.9.2 Paths not tested:

Paths resulting from **id/** where VBUS is on, because **b_sess_vld/** will automatically result in the same transition.
Path from **b_srp_init** to **b_idle** resulting from **id/,** because not practical to distinguish from same transition resulting from **b_srp_done.**

6.8.10 OTG B-device, Capable of ADP and SRP only, State Transition Test

Purpose	This test verifies the UUT follows the correct transitions in the specified state diagrams.
Applies to	OTG B-devices capable of ADP and SRP, but not HNP.
Description	PET performs the necessary actions to force the UUT between each state transition, to ensure correct operation.
Test Setup	Test setup 1 or 2 (see Section 6.3)
Preconditions	'B-UUT Initial Power-up Test' has previously been run to establish the initial conditions for this test.
Checklist	ST4

6.8.10.1 Test Procedure

START ->**b_idle.**
(This was done in Power-Up Test).

First perform following test at Full Speed.

1. No capacitance or pull-down resistance connected to VBUS, ID pin not connected.
2. PET connects **CADP_VBUS** min (1μF) capacitor, and a pull-down resistor of **ROTG_VBUS** min (10kΩ) from VBUS to ground.
3. Wait 8s (ignoring SRP pulse resulting from capacitance change).

b_idle ->**b_peripheral** resulting from **b_sess_vld.**

4. PET turns on VBUS.
5. Check that UUT connects using D+ within **TB_SVLD_BCON** (1s)**.**

b_peripheral ->**b_idle** resulting from **b_sess_vld/.**

6. PET turns off VBUS.
7. Check that UUT disconnects D+ within **TSSEND_LKG** max (1s).

b_idle ->**b_peripheral** resulting from **b_sess_vld.**

8. PET turns on VBUS.
9. Check that UUT connects using D+ within **TB_SVLD_BCON** (1s).

b_peripheral ->**b_idle ->a_idle** resulting from **id/.**

10. PET turns off VBUS (speeding up the fall time by the use of an additional 2kΩ pull-down resistor which is then disconnected), and then connects ID pin to ground.
11. Check that UUT disconnects D+ within 100ms (D+ should not remain on after VBUS is off).
12. Wait 2 seconds.

Note: We may see either an ADP probe or VBUS on at this point, so don't do a check.

a_idle ->b_idle resulting from **id.**

13. PET disconnects ID pin from ground.
14. Check that an ADP probe is performed within 4s.
    Note: This allows the UUT to first perform ADP sensing if designed to do so under these conditions, or to continue with ADP probing but at the B-device rate.
15. Check that the next ADP probe is performed **TB_ADP_PRB** (1.9s to 2.6s OR 0.95s to 1.3s) later.

b_idle ->**b_peripheral** resulting from **b_sess_vld.**

16. PET turns on VBUS
17. Check that UUT connects using D+ within **TB_SVLD_BCON** (1s).
18. PET issues a bus reset, and enumerates the UUT. PET uses SetFeature(**otg_srp_reqd).**

b_peripheral ->**b_idle ->b_srp_init** resulting from **b_sess_vld/** and **b_bus_reqd & b_ssend_srp & b_se0_srp.**

19. PET turns off VBUS.
20. Check that UUT disconnects D+ within **TSSEND_LKG** max (1s).
21. Check that UUT performs SRP within **TTST_SRP** max (5s).

b_srp_init ->**b_idle** resulting from **b_srp_done.**

22. Check that UUT performs ADP probe within **TB_SRP_FAIL** max (6s) plus **TB_ADP_PRB** max (2.6s) plus small margin (total 9s).

b_idle ->**b_srp_init** resulting from **adp_change & b_ssend_srp & b_se0_srp.**

23. PET changes VBUS capacitance to **CADP_VBUS** max (6.5µF).
24. Check that UUT performs ADP probe within 2s.
25. Check that UUT performs SRP pulse within **TB_ADP_PRB_SRP** max (5s).

b_srp_init ->**b_idle** resulting from **b_srp_done.**

26. Check that UUT performs ADP probe within **TB_SRP_FAIL** max (6s) plus **TB_ADP_PRB** max (2.6s) plus small margin (total 9s).
27. PET disconnects capacitance and pull-down resistance from VBUS.
28. Wait 8s (ignoring SRP pulse).

    End of Test.

    Repeat test at High Speed.

6.8.10.2 Paths not tested:

Paths resulting from **id/** where VBUS is on, because **b_sess_vld/** will automatically result in the same transition.
Path from **b_srp_init** to **b_idle** resulting from **id/,** because not practical to distinguish from same transition resulting from **b_srp_done.**

6.8.11 OTG B-device, Capable of SRP only, State Transition Test

Purpose	This test verifies the UUT follows the correct transitions in the specified state diagrams.
Applies to	OTG B-devices capable of SRP, but not ADP or HNP.
Description	PET performs the necessary actions to force the UUT between each state transition, to ensure correct operation.
Test Setup	Test setup 1 or 2 (see Section 6.3)
Preconditions	'B-UUT Initial Power-up Test' has previously been run to establish the initial conditions for this test.
Checklist	ST4

6.8.11.1 Test Procedure

START ->**b_idle.**
(This was done in Power-Up Test).

First perform following test at Full Speed.

1. No capacitance or pull-down resistance connected to V_{BUS}, ID pin not connected.

b_idle ->**b_peripheral** resulting from **b_sess_vld.**

2. PET connects C_{ADP_VBUS} min (1μF) capacitor, and a pull-down resistor of R_{OTG_VBUS} min (10kΩ) from V_{BUS} to ground, and turns on V_{BUS}
3. Check that UUT connects using D+ within $T_{B\_SVLD\_BCON}$ (1s).

b_peripheral ->**b_idle** resulting from **b_sess_vld/.**

4. PET turns off V_{BUS}.
5. Check that UUT disconnects D+ within T_{SSEND_LKG} max (1s).

b_idle ->**b_peripheral** resulting from **b_sess_vld.**

6. PET turns on V_{BUS}
7. Check that UUT connects using D+ within $T_{B\_SVLD\_BCON}$ (1s).

b_peripheral ->**b_idle ->a_idle** resulting from **id/.**

8. PET turns off V_{BUS}, pulling it down using a 2kΩ resistor, and connects ID pin to ground.
9. Check that UUT disconnects D+ within 100ms.
10. Check that V_{BUS} is above $V_{OTG\_SESS\_VLD}$ max (4V) within $T_{A\_VBUS\_ATT}$ max (200ms). Check rise time from $V_{OTG\_VBUS\_LKG}$ to $V_{A\_VBUS\_AVG\_LO}$ does not exceed $T_{A\_VBUS\_RISE}$.
11. Wait 1s.

a_idle ->b_idle resulting from **id.**

12. PET disconnects ID pin from ground.
13. Check that VBUS goes below **VOTG_SESS_VLD** min (0.8V) within **TSSEND_LKG** max (1 sec).
14. Wait 1s.

b_idle ->**b_peripheral** resulting from **b_sess_vld.**

15. PET turns on VBUS.
16. Check that UUT connects using D+ within **TB_SVLD_BCON** (1s).
17. PET issues a bus reset, and enumerates the UUT. PET uses SetFeature(**otg_srp_reqd).**

b_peripheral ->**b_idle ->b_srp_init** resulting from **b_sess_vld/** and **b_bus_reqd & b_ssend_srp & b_se0_srp.**

18. PET turns off VBUS and disconnects capacitance and pull-down resistance from VBUS.
19. Check that UUT disconnects D+ within **TSSEND_LKG** max (1s).
20. Check that UUT performs SRP within **TTST_SRP** max (5s).

b_srp_init ->**b_idle** resulting from **b_srp_done.**

21. Wait 6s.
    End of Test.
    Repeat test at High Speed.

6.8.11.2 Paths not tested:

Paths resulting from **id/** where VBUS is on, because **b_sess_vld/** will automatically result in the same transition.
Path from **b_srp_init** to **b_idle** resulting from **id/,** because not practical to distinguish from same transition resulting from **b_srp_done.**

6.8.12 OTG B-device, Capable of No Protocol, State Transition Test

Purpose	This test verifies the UUT follows the correct transitions in the specified state diagrams.
Applies to	OTG B-devices not capable of SRP, ADP or HNP.
Description	PET performs the necessary actions to force the UUT between each state transition, to ensure correct operation.
Test Setup	Test setup 1 or 2 (see Section 6.3)
Preconditions	'B-UUT Initial Power-up Test' has previously been run to establish the initial conditions for this test.
Checklist	ST4

6.8.12.1 Test Procedure

START ->**b_idle.**
(This was done in Power-Up Test).

First perform following test at Full Speed.

1. No capacitance or pull-down resistance connected to V_{BUS}, ID pin not connected.

b_idle ->**b_peripheral** resulting from **b_sess_vld.**

2. PET connects C_{ADP_VBUS} min (1µF) capacitor, and a pull-down resistor of R_{OTG_VBUS} min (10kΩ) from V_{BUS} to ground, and turns on V_{BUS}
3. Check that UUT connects using D+ within $T_{B\_SVLD\_BCON}$ (1s).

b_peripheral ->**b_idle** resulting from **b_sess_vld/.**

4. PET turns off V_{BUS}.
5. Check that UUT disconnects D+ within T_{SSEND_LKG} max (1s).

b_idle ->**b_peripheral** resulting from **b_sess_vld.**

6. PET turns on V_{BUS}
7. Check that UUT connects using D+ within $T_{B\_SVLD\_BCON}$ (1s).

b_peripheral ->**b_idle ->a_idle** resulting from **id/.**

8. PET turns off V_{BUS}, pulling it down using a 2kΩ resistor, and connects ID pin to ground.
9. Check that UUT disconnects D+ within 100ms.
10. Check that V_{BUS} is above $V_{OTG\_SESS\_VLD}$ max (4V) within $T_{A\_VBUS\_ATT}$ max (200ms). Check rise time from $V_{OTG\_VBUS\_LKG}$ to $V_{A\_VBUS\_AVG\_LO}$ does not exceed $T_{A\_VBUS\_RISE}$.
11. Wait 1s.

a_idle ->b_idle resulting from **id.**

12. PET disconnects ID pin from ground.
13. Check that VBUS goes below **VOTG_SESS_VLD** min (0.8V) within **TSSEND_LKG** max (1 sec).
14. Wait 1s.

b_idle ->**b_peripheral** resulting from **b_sess_vld.**

15. PET turns on VBUS.
16. Check that UUT connects using D+ within **TB_SVLD_BCON** (1s).
17. PET issues a bus reset, and enumerates the UUT.

b_peripheral ->**b_idle** resulting from **b_sess_vld/.**

18. PET turns off VBUS and disconnects capacitance and pull-down resistance from VBUS.
19. Check that UUT disconnects D+ within **TSSEND_LKG** max (1s).
20. Wait 6s.

Repeat test at High Speed.

End of Test.

6.8.12.2 Paths not tested:

Paths resulting from **id/** where VBUS is on, because **b_sess_vld/** will automatically result in the same transition.

6.8.13 ADP-Capable Peripheral Only B-device State Transition Test

Purpose	This test verifies the UUT follows the correct transitions in the specified state diagrams.
Applies to	Peripheral Only B-devices capable of ADP and SRP.
Description	PET performs the necessary actions to force the UUT between each state transition, to ensure correct operation.
Test Setup	Test setup 3 (see Section 6.3.3)
Preconditions	'B-UUT Initial Power-up Test' has previously been run to establish the initial conditions for this test.
Checklist	ADP15, ST1

6.8.13.1 Test Procedure

START ->**bp_idle.**
(This was done in Power-Up Test).

First perform following test at Full Speed.

1. No capacitance or pull-down resistance connected to VBUS, ID pin not connected.
2. PET connects **CADP_VBUS** min (1µF) capacitor, and a pull-down resistor of **ROTG_VBUS** min (10kΩ) from VBUS to ground.
3. Wait 8s (ignoring SRP pulse resulting from capacitance change).

bp_idle ->**bp_peripheral** resulting from **b_sess_vld.**

4. PET turns on VBUS.
5. Check that UUT connects using D+ within **TB_SVLD_BCON** (1s)
6. PET issues a bus reset, and enumerates the UUT. PET uses SetFeature(**otg_srp_reqd).**

bp_peripheral ->**bp_idle ->bp_srp_init** resulting from **b_sess_vld/** and **b_bus_reqd & b_ssend_srp & b_se0_srp.**

7. PET turns off VBUS.
8. Check that UUT disconnects D+ within **TSSEND_LKG** max (1s).
9. Check that UUT performs SRP within **TTST_SRP** max (5s).

bp_srp_init ->**bp_idle** resulting from **b_srp_done.**

10. Check that UUT performs ADP probe within **TB_SRP_FAIL** max (6s) plus **TB_ADP_PRB** max (2.6s) plus small margin (total 9s).

bp_idle ->**bp_srp_init** resulting from **adp_change & b_ssend_srp & b_se0_srp.**

11. PET changes VBUS capacitance to **CADP_VBUS** max (6.5µF), ensuring that this occurs in-between probes.
12. Check that UUT performs ADP probe within 2s.
13. Check that UUT performs SRP pulse within **TB_ADP_PRB_SRP** max (5s).

bp_srp_init ->**bp_idle** resulting from **b_srp_done.**

14. Check that UUT performs ADP probe within 2s.
15. PET disconnects capacitance and pull-down resistance from VBUS.
16. Wait 8s (ignoring SRP pulse).

End of Test.

Repeat test at High Speed.

6.8.13.2 Paths not tested:

None.

6.8.14 SRP Only Capable Peripheral Only B-device State Transition Test

Purpose	This test verifies the UUT follows the correct transitions in the specified state diagrams.
Applies to	Peripheral Only B-devices capable of SRP, but not ADP.
Description	PET performs the necessary actions to force the UUT between each state transition, to ensure correct operation.
Test Setup	Test setup 3 (see Section 6.3.3)
Preconditions	'B-UUT Initial Power-up Test' has previously been run to establish the initial conditions for this test.
Checklist	ST1

6.8.14.1 Test Procedure

START ->**bp_idle.**
(This was done in Power-Up Test).

First perform following test at Full Speed.

1. No capacitance or pull-down resistance connected to V_{BUS}.

bp_idle ->**bp_peripheral** resulting from **b_sess_vld.**

2. PET connects C_{ADP_VBUS} max (6.5μF) capacitor, and a pull-down resistor of R_{OTG_VBUS} min (10kΩ) from V_{BUS} to ground., and turns on V_{BUS}.
3. Check that UUT connects using D+ within $T_{B\_SVLD\_BCON}$ (1s).
4. PET issues a bus reset, and enumerates the UUT. PET uses SetFeature(**otg_srp_reqd).**

bp_peripheral ->**bp_idle ->bp_srp_init** resulting from **b_sess_vld/** and **b_bus_reqd & b_ssend_srp & b_se0_srp**

5. PET turns off V_{BUS}.
6. Check that UUT disconnects D+ within T_{SSEND_LKG} max (1s).
7. Check that UUT performs SRP within T_{TST_SRP} max (5s).

bp_srp_init ->**bp_idle** resulting from **b_srp_done**

8. PET disconnects capacitance and pull-down resistance from V_{BUS}.
9. Wait 2s.

End of Test
Repeat test at High Speed.

6.8.14.2 Paths not tested:

None.

6.8.15 Peripheral Only B-device, Capable of No Protocols, State Transition Test

Purpose	This test verifies the UUT follows the correct transitions in the specified state diagrams.
Applies to	Peripheral Only B-devices capable of neither SRP nor ADP.
Description	PET performs the necessary actions to force the UUT between each state transition, to ensure correct operation.
Test Setup	Test setup 3 (see Section 6.3.3)
Preconditions	'B-UUT Initial Power-up Test' has previously been run to establish the initial conditions for this test.
Checklist	ST1

6.8.15.1 Test Procedure

START ->**bp_idle.**
(This was done in Power-Up Test).

First perform following test at Full Speed.

10. No capacitance or pull-down resistance connected to VBUS.

bp_idle ->**bp_peripheral** resulting from **b_sess_vld.**

11. PET connects **CADP_VBUS** max (6.5μF) capacitor, and a pull-down resistor of **ROTG_VBUS** min (10kΩ) from VBUS to ground., and turns on VBUS.
12. Check that UUT connects using D+ within **TB_SVLD_BCON** (1s).
13. PET issues a bus reset, and enumerates the UUT.

bp_peripheral ->**bp_idle** resulting from **b_sess_vld/**

14. PET turns off VBUS.
15. Check that UUT disconnects D+ within **TSSEND_LKG** max (1s).
16. PET disconnects capacitance and pull-down resistance from VBUS.
17. Wait 2s.

    End of Test

    Repeat test at High Speed.

6.8.15.2 Paths not tested:

None.

6.8.16 B-UUT "Device no response" for SRP

Purpose	This test verifies that the B-UUT displays an error message when it is unable to start a session using SRP. The B-UUT is attached to a non-responsive A-PET for this test.
Applies to	SRP-Capable: EH B-ports, OTG B-devices, Peripheral-only B-devices
Description	Uses SetFeature(**otg_srp_reqd)** to cause the B-UUT to generate an SRP pulse, then fail to respond to the SRP. Check that a suitable error message is generated.
Test Setup	Test setup 1 or 2 (see Section 6.3)
Preconditions	'B-UUT Initial Power-up Test' has previously been run to establish the initial conditions for this test.
Checklist	SRP13, MSG11, M5, ST4
Pass Criteria	The test fails if: The B-UUT does not display a "Device notresponding" or similar type error message between the 5s and 6s messages.

6.8.16.1 Test Procedure

1. Cable is already attached with the B-device powered up. The PET is not applying VBUS, and not applying capacitance or pull-down resistance between VBUS and ground.
2. Check that UUT is not sourcing VBUS.
3. Turn VBUS on (5V), and simultaneously connect C_{ADP_VBUS} max (6.5µF), and a pull-down resistor of R_{OTG_VBUS} min (10kΩ) between VBUS and ground.
4. Check that D+ goes high within 5s. We expect it to connect within $T_{B\_SVLD\_BCON}$ (1s).
5. Wait 100ms then issue a bus reset to the B-UUT.
6. Enumerate, checking:
    a. Valid response to GetDescriptor(**Device**).
    b. Valid response to GetDescriptor(**Configuration**).
    c. OTG descriptor in configuration descriptor has valid fields.
    d. OTG descriptor in configuration descriptor declares SRP capability.
    e. Valid response to GetDescriptor(**String**) for declared strings.
    f. Valid response to GetDescriptor(**OTG**).
    g. Separate OTG descriptor has valid fields.
    h. Separate OTG descriptor declares SRP capability
7. SetConfiguration(1).
8. SetFeature(**otg_srp_reqd).** This test mode feature bit requires the UUT to perform an SRP request within 5s of VBUS going off.
9. Wait 1s.
10. Turn off VBUS.
11. Check that D+ is not asserted within $T_{B\_SE0\_SRP}$ (1s) of this time, or within $T_{B\_SSEND\_SRP}$ (1.5s) of VBUS having gone below $V_{OTG\_SESS\_VLD}$ max (4V).
12. Check that D+ is asserted within 5s of VBUS going below $V_{OTG\_SESS\_VLD}$ min (0.8V).
13. Check that D+ remains high for $T_{B\_DATA\_PLS}$ (5 to 10ms).
14. Do not turn on VBUS.
15. Wait $T_{B\_SRP\_FAIL}$ max (6s).

16. Display Message "Click OK if 'Device No Response' indication displayed on UUT".
17. If operator clicks OK before 30s elapses since V_{BUS} went on, then UUT passes test.
18. If 30s elapses first, then UUT fails test.
19. Disconnect V_{BUS} capacitance and V_{BUS} pull-down resistor.
20. Wait 2s. to allow disconnection to be recognized.

End of Test.

6.8.17 B-UUT "Unsupported Device"

Purpose	This test verifies that the B-UUT displays an unsupported device error message when it becomes host and enumerates the A-PET which is programmed to have an unsupported Vendor and Device ID.
Applies to	OTG B-devices capable of HNP in the B-device position
Description	UsesSetFeature(**otg_hnp_reqd)** to force B-UUT to become host. Get enumerated and respond as an unknown device, not supporting HNP. Check that a suitable error message is generated.
Test Setup	Test setup 1 or 2 (see Section 6.3)
Preconditions	'B-UUT Initial Power-up Test' has previously been run to establish the initial conditions for this test.
Checklist	M5, ST4, TP15
Pass Criteria	The test fails if: The B-UUT does not display an "Unsupported device" or similar error message before 30s.

6.8.17.1 Test Procedure

1. Cable is already attached with the B-device powered up. The PET is not applying V_{BUS}, and not applying capacitance or pull-down resistance between V_{BUS} and ground.
2. Check that UUT is not sourcing V_{BUS}.
3. Turn V_{BUS} on (5V), and simultaneously connect C_{ADP_VBUS} max (6.5µF), and a pull-down resistor of R_{OTG_VBUS} min (10kΩ) between V_{BUS} and ground.
4. Check that D+ goes high within 5s. We expect it to connect within $T_{B\_SVLD\_BCON}$ (1s).
5. Wait 100ms then issue a bus reset to the B-UUT.
6. Enumerate at Full Speed, checking valid responses.
7. SetConfiguration(1).
8. GetStatus(**OTG**) Check valid response.
9. SetFeature(**'otg_hnp_reqd).** Check valid response. This test mode feature bit requires the UUT to perform an HNP request within 5s of V_{BUS} going off.
10. Wait 1s.
11. GetStatus(**OTG**). Check valid response. Check that Host Request Flag is set.
12. SetFeature(**b_hnp_enable***).* Check valid response.
13. Wait 1s.
14. Stop sending SOFs.
15. Check that B-device under test turns off D+ pull-up within $T_{B\_AIDL\_BDIS}$ max (150ms) of start of suspend, but more than $T_{B\_FS\_BDIS}$ min (1ms).
16. Wait 140ms, i.e. $T_{A\_BDIS\_ACON}$ (150ms) minus a small amount.
17. Connect D+ pull-up.
18. Check that we see start of a bus reset (SE0) within $T_{B\_ACON\_BSE0}$ (150ms) of D+ pull-up.
19. Allow PET to be enumerated by B-device under test. The PET responds with a VID / PID combination not on the TPL of the UUT (by default 0x1A0A / 0x0201, but the test operator may select other combinations), and also with the OTG descriptor stating that it does not support HNP. Check that enumeration was successful. If HNP polled, respond with Host Request Flag cleared.

20. Start 30s timer when Device Descriptor is read.
21. Display Message "Click OK if 'Unsupported Device' indication displayed on UUT".
22. If operator clicks OK before 30s timer expires, then UUT passes test.
23. If 30s elapses first, then UUT fails test.
24. Wait for 10s.
25. PET disconnects (no capacitance or pull-down resistor on VBUS and no pullup on D+).
26. Wait 2s. to allow disconnection to be recognized.

End of Test.

6.8.18 B-UUT "Device No Response" for HNP

Purpose	This test verifies that the B-UUT displays an error message when it starts a session and HNP fails.
Applies to	OTG B-devices capable of HNP in the B-device position
Description	Uses SetFeature(**otg_hnp_reqd)** to force B-UUT to become host. Fail to respond as a peripheral. Check that a suitable error message is generated.
Test Setup	Test setup 1 or 2 (see Section 6.3)
Preconditions	'B-UUT Initial Power-up Test' has previously been run to establish the initial conditions for this test.
Checklist	M5, MSG11, SRP13, ST4
Pass Criteria	The test fails if: The B-UUT does not display a "Device no response" or similar type error message before 30s.

6.8.18.1 Test Procedure

1. Cable is already attached with the B-device powered up. The PET is not applying VBUS, and not applying capacitance or pull-down resistance between VBUS and ground.
2. Check that UUT is not sourcing VBUS.
3. Turn VBUS on (5V), and simultaneously connect **CADP_VBUS** max (6.5µF), and a pull-down resistor of **ROTG_VBUS** min (10kΩ) between VBUS and ground.
4. Check that D+ goes high within 5s. We expect it to connect within **TB_SVLD_BCON** (1s).
5. Wait 100ms then issues a bus reset to the B-UUT.
6. Enumerate at Full Speed, checking valid responses.
7. SetConfiguration(1).
8. GetStatus(**OTG**) Check valid response.
9. SetFeature(**'otg_hnp_reqd).** Check valid response. This test mode feature bit requires the UUT to perform an HNP request within 5s of VBUS going off.
10. Wait 1s.
11. GetStatus(**OTG**). Check valid response. Check that Host Request Flag is set.
12. SetFeature(**b_hnp_enable***).* Check valid response.
13. Wait 1s.
14. Stop sending SOFs and start timer.
15. Display Message "Click OK if 'Unsupported Device' indication displayed on UUT".
16. If operator clicks OK before 30s timer expires, then UUT passes test.
17. If 30s elapses first, then UUT fails test.
18. PET disconnects (no capacitance or pull-down resistor on VBUS).
19. Wait 2s. to allow disconnection to be recognized.

End of test.

7 Manual Interoperability Tests

7.1 Introduction

Targeted Hosts are tested for interoperability with peripherals from the device's own Targeted Peripheral List plus other retail USB products which could be attached to the Targeted Host.

7.1.1 What does "Category" mean?

This is the general type of a specific Targeted Peripheral that an A-UUT has listed on its TPL. Examples of categories are: memory sticks, CDROMs, MTP peripherals, audio headsets, mice, keyboards, etc. The category storage includes USB floppy, USB CDROM, Flash card readers etc. An A-UUT can limit its output the power, based on which Targeted Peripheral is connected. For example if the A-UUT limits its output power to 100mA, based on the power requirements of a particular Targeted Peripheral, it can only additionally support memory sticks that consume no more than 100mA.

7.1.2 What does "Prove Functionality" mean?

Does the A-UUT function in the way that has been defined by the A-UUT vendor which can be functionally less than the user may expect. Proving the functionality of a device can be limited to some very basic operations e.g. A device of the memory stick category can have a single function to read out specific file types and provide no other function.

There should however be some operation which provides value to the end user; it is not sufficient to enumerate the device and show the device as available to the user without providing any further functionality. Where multiple, selected USB modes are provided the A-UUT is expected to follow these requirements in all modes of operation.

7.2 Interoperability Requirements

7.2.1 Targeted Peripheral List

Any OTG device, acting as a host, must work with all the peripherals listed on the device's Targeted Peripheral List.

The manufacturer of an OTG device is expected to provide a subset of the peripheral(s) from the device's Targeted Peripheral List for testing. It is required that the OTG device, acting as a host, proves functionality with the peripheral(s) supplied from the device's Targeted Peripheral List.

The manufacturer is responsible for verifying that the OTG device supports all the peripherals listed on the device's Target Peripheral List. If an OTG device is found NOT to work with a peripheral on the device's Targeted Peripheral List, all of the OTG devices on the shelves could be recalled.

7.2.2 Error messages

Silent failures are not allowed and therefore a clear message shall be generated when any sort of error situation occurs.

Where hubs are non-supported a clear "Hub not supported" or similar error message appears and not a generic "not supported" or similar error message.

7.2.3 Hub support

If an A-UUT supports hubs following items shall be taken into account:

- Simultaneous operation of multiple peripherals shall be supported
- Full speed hubs shall be supported

- Where bus powered hubs are supported the potential limitation of 100mA for each port shall be considered

7.3 Interoperability test definitions

7.3.1 A-UUT Functionality B-device

Purpose	Prove the functionality of an OTG A-device or EH
Applies to	OTG A-devices and EH's that perform VID/PID detection of TPL peripherals
Description	Test the functionality of the TPL peripherals
Test setup	At least one TPL device corresponding to each supported category
Preconditions	The A-UUT is powered ON Use a Micro-A plug to Standard-A Receptacle adapter if the product is an OTG device.
Checklist	TPL2-4, TPL7
Pass Criteria	Prove the functionality of all TPL B-devices in combination with the A-UUT

7.3.1.1 Test procedure

1. Power ON the A-UUT.
    a. If the product is an OTG device with a Micro-AB receptacle then attach a Micro-A plug to Standard-A Receptacle adapter.
    b. If the B-device requires external power, power on the B-device.
2. Attach a B-device taken from the TPL and prove functionality.
3. Detach the B-device and see if the device is disconnected correctly.
4. Attach the B-device and prove functionality.

End of test.

Repeat the above steps for each of the different supported category e.g. if A-UUT supports two mice, four keyboards, two MSC device than the above test should be performed with these 3 peripherals.

7.3.2 A-UUT Category Functionality B-device

Purpose	Prove the category functionality of an OTG A-deviceor EH
Applies to	OTG A-devices and EH's that support a certain category of device
Description	Test the functionality of each of the supported categories
Test setup	- One B-device of each supported category with 500mA in their descriptor, if not available use a device with highest max power descriptor value. - If available one B-device of each supported category with an additional interface(s) (composite device). If not available use a device with one interface.
Preconditions	The A-UUT is powered ON Use a Micro-A plug to Standard-A Receptacle adapter if the product is an OTG device.
Checklist	MSG2, MSG3, TPL2-4, TPL7
Pass Criteria	Prove the functionality of the B-devices in combination with A-UUT For the composite device it is not mandatory to prove functionality however if the device does not operate a clear message shall be generated by the A-UUT. If a device does not work a clear error message shall be shown to the user.

7.3.2.1 Test procedure

1. Power ON A-UUT.
    a. If the product is an OTG device with a Micro-AB receptacle then attach a Micro-A plug to Standard-A Receptacle adapter.
    b. If the B-device requires external power, power on the B-device.
2. Attach a B-device and prove functionality.
3. Detach B-device and see if device is disconnected properly.
4. Attach the B-device and prove functionality.

End of test.

Repeat the above steps for each of the different supported category with the five different peripherals as defined in the Test setup.

7.3.3 A-UUT Boot test

Purpose	Prove the functionality of an OTG A-device or EH after boot
Applies to	OTG A-devices and EH's
Description	Observe boot behavior while a B-device is attached
Test setup	One B-device of each supported category.
Preconditions	The A-UUT is powered OFF Use a Micro-A plug to Standard-A Receptacle adapter if the product is an OTG device.
Checklist	C3
Pass Criteria	Prove the functionality of the B-devices in combination with A-UUT after a boot

7.3.3.1 Test procedure

1. Power OFF A-UUT.
    a. If the product is an OTG device with a Micro-AB receptacle then attach a Micro-A plug to Standard-A Receptacle adapter.
    b. If the B-device requires external power, power on the B-device.
2. Attach a B-device.
3. Power ON the A-UUT.
4. Prove the functionality of the B-device.

End of test.

Repeat the above steps for each of the different supported categories.

7.3.4 A-UUT Legacy Speed test

Purpose	Prove the functionality of the OTG A-device or EH in Full or Low Speed
Applies to	High Speed OTG A-devices and EH's that have a Full or Low Speed device on their TPL. Perform this test only if it not has been performed in one of the previous tests.
Description	Test the functionality of the Full or Low Speed TPL device
Test setup	One supported Full Speed (Full Speed support is mandatory) or Low speed device
Preconditions	The A-UUT is powered ON Use a Micro-A plug to Standard-A Receptacle adapter if the product is an OTG device.
Checklist	E15, E18
Pass Criteria	The functionality of the full or low speed device is proven. If a device does not work a clear error message shall be shown to the user.

7.3.4.1 Test procedure

1. Power ON the A-UUT.

   a. If the product is an OTG device with a Micro-AB receptacle then attach Micro-A plug to Standard-A Receptacle adapter.
   b. If the B-device requires external power, power on the B-device.
2. Attach a Full Speed B-device and prove functionality.

End of test.

7.3.5 A-UUT Concurrent and Independently test

Purpose	Prove the functionality of all downstream ports
Applies to	EH with multiple ports
Description	Test the concurrent and independent functioning of the TPL peripherals on each downstream port.
Test setup	For each downstream port a similar device from the TPL. If detection is made using VID/PID and/or for category support the number of B-devices is equal to the number of ports. This test shall be performed on each supported category.
Preconditions	The A-UUT is powered ON
Checklist	E17
Pass Criteria	The A-UUT can operate the device concurrently and independently or a selection method is available for the end-user to select a device. Note that a A-UUT is allowed to handle a limited number of concurrent peripherals.

7.3.5.1 Test procedure

1. Power on the A-UUT.
   a. If the B-device requires external power, power on the B-device.
2. Attach a B-device to port 1.
3. Attach another B-device of the same category to an available downstream port.
4. Continue attaching B-devices of the same category until all ports are full.
5. Prove functionality of each attached B-device.
   a. Do they operate concurrently and independently.
   b. Or is a selection method available such that the user can select the active B-device.
6. Remove one device and replace it with a device of another category if multiple categories are supported.
7. Remove all peripherals.

End of test.

Repeat the above steps for each of the different supported category.

7.3.6 A-UUT Unsupported device Message test

Purpose	Prove that the OTG A-device or EH generates the correct error message when attaching an unsupported device
Applies to	OTG A-devices and EH's
Description	Observe error messages when attaching unsupported peripherals
Test setup	One unsupported Low speed device One unsupported Full speed device One unsupported High speed device One unsupported Super speed device One unsupported composite device with more than 8 interfaces
Preconditions	The A-UUT is powered ON Use a Micro-A plug to Standard-A Receptacle adapter if the product is an OTG device.
Checklist	MSG2, MSG3, TPL2, TPL5
Pass Criteria	A clear message is generated by the A-UUT when attaching an unsupported device.

7.3.6.1 Test procedure

1. Power on the A-UUT.
    a. If the product is an OTG device with a Micro-AB receptacle then attach a Micro-A plug to Standard-A Receptacle adapter.
    b. If the B-device requires external power, power on the B-device.
2. Attach one of the peripherals listed above.
3. Observe if a clear message is generated to the end-user.

End of test.

Repeat the above steps for each of the peripherals listed in the Test setup.

Note that an error message SHALL be generated when attaching a device in a device class which is not already covered by a product on the TPL. It is not permitted to support device classes without listing corresponding products on your TPL.

7.3.7 A-UUT Hub Error message test

Purpose	Prove that an OTG A-device or EH generates a hub error message
Applies to	OTG A-devices and EH's that don't support hubs
Description	Test that a hub error message is displayed
Test setup	One 4 port High Speed Self Powered Hub (If hub support is provided by VID/PID in TPL use this Hub) At least one TPL device
Preconditions	The A-UUT is powered ON. Use a Micro-A plug to Standard-A Receptacle adapter if the product is an OTG device.
Checklist	MSG2, MSG3, MSG5
Pass Criteria	A clear message is displayed that hubs are not supported and the device does not function on the downstream ports of the hub.

7.3.7.1 Test procedure

1. Power on the A-UUT.
    a. If the product is an OTG device with a Micro-AB receptacle then attach a Micro-A plug to Standard-A Receptacle adapter.
    b. Connect external power to the hub.
2. Attach the hub.
3. A clear hub not supported message should appear.
4. Attach a TPL device downstream from the hub.
5. Check that the device does not function downstream from the hub.

End of test.

7.3.8 A-UUT Hub Functionality test

Purpose	Prove that a hub attached to an OTG A-device or EH hub either functions or causes a hub error message
Applies to	OTG A-devices and EH's which support hub(s)
Description	Test the hub functionality with TPL peripherals
Test setup	One 4 port High Speed Self Powered Hub (If hub support is performed by VID/PID in TPL use this Hub) At least one TPL device from each category FS device if listed on TPL (for TT stress)
Preconditions	The A-UUT is powered ON. Use a Micro-A plug to Standard-A Receptacle adapter if the product is an OTG device.
Checklist	TPL4, MSG2, MSG3, MSG5
Pass Criteria	Prove the functionality of the all device categories listed in TPL attached downstream from one hub

7.3.8.1 Test procedure

1. Power on the A-UUT.
    a. If the product is an OTG device with a Micro-AB receptacle then attach a Micro-A plug to Standard-A Receptacle adapter.
    b. If the B-device requires external power, power on the B-device.
2. Attach the Hub.
3. Attach one supported High speed device downstream from the hub and prove its functionality.
4. Prove the functionality of each supported category downstream from one hub.
5. Detach the high speed device.
6. Attach one supported Full speed device (if supported) downstream from the hub and prove its functionality.
7. Detach the full speed device.

End of test.

7.3.9 A-UUT Hub maximum tier test

Purpose	Prove the maximum tier hub functionality of an OTG A-device or EH
Applies to	OTG A-devices and EH's which support hubs
Description	Test the functionality of the TPL peripherals after the maximum defined tier of hubs and see that an appropriate error message is generated when exceeding the max tier.
Test setup	The number of hubs plus one that is defined as maximum tier of hubs. One TPL device
Preconditions	The A-UUT is powered ON. Use a Micro-A plug to Standard-A Receptacle adapter if the product is an OTG device.
Checklist	MSG2, MSG3, MSG6
Pass Criteria	One TPL device to prove to work downstream from the maximum defined tier of hubs. When exceeding the maximum tier of hubs the appropriate error message was generated.

7.3.9.1 Test procedure

1. Power on A-UUT.
    a. If the product is an OTG device with a Micro-AB receptacle then attach a Micro-A plug to Standard-A Receptacle adapter.
2. Attach hubs up to the maximum tier.
3. Attach one TPL device downstream from the last hub and prove functionality.
4. Attach another hub downstream from the max tier of hubs.
5. Check that an appropriate error message is generated.

End of test.

7.3.10 A-UUT Hub Concurrent and Independent test

Purpose	Prove the functionality of multiple TPL peripherals attached downstream from a hub
Applies to	OTG A-devices and EH's which support hubs
Description	Test the functionality of the TPL peripherals in several configurations and ensure that each device is able to operate concurrently and independently.
Test setup	One 4 port High Speed Self Powered Hub (If hub support is performed by VID/PID in TPL use this Hub) Four similar peripherals from TPL if detection is made using VID/PID and/or for category support a number of B-devices equal to the number of ports. This test shall be performed on each supported category.
Preconditions	The A-UUT is powered ON. Use a Micro-A plug to Standard-A Receptacle adapter if the product is an OTG device.
Checklist	C4
Pass Criteria	The A-UUT can operate the peripherals concurrently and independently or a selection method is available for the end-user to select a device. If a device does not work a clear error message should be shown to the user.

7.3.10.1 Test procedure

1. Power on the A-UUT.
    a. If the product is an OTG device with a Micro-AB receptacle then attach a Micro-A plug to Standard-A Receptacle adapter.
    b. If the B-device requires external power, power on the B-device.
2. Attach a B-device to the hub's downstream port 1.
3. Attach similar peripherals to available downstream hub ports.
4. Prove the functionality of each attached device.
    a. do they operate concurrently and independently
    b. or is a selection method available such that the user can select the active device?
5. Detach one device and replace it with a device of another category if multiple categories are supported.
6. Detach all peripherals.

End of test.

Repeat the above steps for each of the different supported category.

7.3.11 A-UUT Bus powered hub power exceeded test

Purpose	Prove that the host generates an appropriate error message when connecting a high power device downstream from a bus powered hub.
Applies to	OTG A-device and EH's which support bus powered hubs.
Description	Check that the A-UUT is able to detect and prevent an over current event on a bus powered hub.
Test setup	A bus powered hub. High power device from the TPL (Max power descriptor >100mA). If no high power device is available on TPL use other high power device.
Preconditions	The A-UUT is powered ON Use a Micro-A plug to Standard-A Receptacle adapter if the product is an OTG device.
Checklist	C5
Pass Criteria	An appropriate error message was generated.

7.3.11.1 Test procedure

1. Power on the A-UUT.
    a. If the product is an OTG device with a Micro-AB receptacle then attach a Micro-A plug to Standard-A Receptacle adapter.
2. Attach a bus powered Hub.
3. Attach a high power device downstream from a bus powered hub.
4. Check that an appropriate error message is generated by the A-UUT.

End of test.

7.3.12 A-UUT Maximum concurrently device exceed message test

Purpose	Prove that the OTG A-device or EH generates an appropriate error message when exceeding the maximum allowed number of concurrent peripherals
Applies to	OTG A-devices and EH's which support a limited number of peripherals concurrently
Description	Test the A-UUT for appropriate behavior when exceeding the maximum number of supported concurrent peripherals up to a maximum of four.
Test setup	May require hubs to be attached in order to exceed maximum number of peripherals. The number of similar peripherals that the A-UUT is able to handle concurrently plus one up to a maximum of four.
Preconditions	The A-UUT is powered ON. Use a Micro-A plug to Standard-A Receptacle adapter if the product is an OTG device.
Checklist	MSG1, MSG2, MSG7
Pass Criteria	Prove that the specified maximum number of concurrent peripherals function correctly, and either that an error message is given when exceeding this number or that it is able to handle 4 peripherals.

7.3.12.1 Test procedure

1. Power ON the A-UUT.
    a. If the product is an OTG device with a Micro-AB receptacle then attach a Micro-A plug to Standard-A Receptacle adapter.
    b. If the B-device requires external power, power on the B-device.
2. Attach a B-device and prove its functionality.
3. Keep increasing the number of similar peripherals attached until the maximum number is reached, proving their functionality each time.
4. Attach an additional similar peripherals.
5. Check that an appropriate error message is generated by the A-UUT or that it is able to handle 4 peripherals without error.

End of test.

7.3.13 A-UUT Standby test

Purpose	Prove that the host can handle standby correctly
Applies to	OTG A-devices and EH products which support standby
Description	With a B-device connected verify standby operation of the A-UUT.
Test setup	At least one TPL device from each category
Preconditions	The A-UUT is powered ON. Use a Micro-A plug to Standard-A Receptacle adapter if the product is an OTG device.
Checklist	C2
Pass Criteria	Compliant standby behavior is observed.

7.3.13.1 Test procedure

1. Power ON the A-UUT.
    a. If the product is an OTG device with a Micro-AB receptacle then attach a Micro-A plug to Standard-A Receptacle adapter.
    b. If the B-device requires external power, power on the B-device.
2. Attach a B-device and prove its functionality.
3. Place the A-UUT in standby (follow the A-UUT vendor guidelines to force the host into standby mode).
4. Take the A-UUT out of standby mode (A-UUT may also come out of standby automatically on detach).
5. Prove the functionality of the B-device.

End of test.

Perform this test for each supported category.

If different type of Standby modes are supported repeat the test till all modes are covered.

7.3.14 A-UUT Standby Disconnect test

Purpose	Prove the standby functionality of the OTG A-device or EH when a peripheral is detached during standby mode
Applies to	OTG A-devices and EH's which support standby
Description	Detach TPL peripheral while A-UUT is in standby mode. Verify that the A-UUT operates correctly after the A-UUT leaves standby mode.
Test setup	At least one TPL peripheral
Preconditions	The A-UUT is powered ON Use a Micro-A plug to Standard-A Receptacle adapter if the product is an OTG device.
Checklist	C2
Pass Criteria	Compliant standby behavior is observed.

7.3.14.1 Test procedure

1. Power ON the A-UUT.
    a. If the product is an OTG device with a Micro-AB receptacle then attach a Micro-A plug to Standard-A Receptacle adapter.
    b. If the B-device requires external power, power on the B-device.
2. Attach a peripheral and prove its functionality.
3. Place A-UUT into standby (follow A-UUT vendor guidelines to force the host in standby mode).
4. Detach Peripheral.
5. Take the A-UUT out of standby (A-UUT may also come out of standby automatically on detach).
6. Verify that A-UUT operates correctly.

End of test.

If different types of standby mode are supported repeat the test until all modes have been tested.

7.3.15 A-UUT Standby Attach test

Purpose	Prove the standby functionality of the OTG A-device or EH when a peripheral is attached during standby mode
Applies to	OTG A-devices and EH's which support standby
Description	Attach a TPL peripheral while the A-UUT is in standby mode. Verify A-UUT does operates correctly after the A-UUT leaves standby mode
Test setup	At least one TPL peripheral
Preconditions	The A-UUT is powered ON. Use a Micro-A plug to Standard-A Receptacle adapter if the product is an OTG device.
Checklist	C2
Pass Criteria	Compliant standby behavior is observed.

7.3.15.1 Test procedure

1. Power ON the A-UUT.
    a. If the product is an OTG device with a Micro-AB receptacle then attacha Micro-A plug to Standard-A Receptacle adapter.
    b. If the B-device requires external power, power on the B-device.
2. Place the A-UUT into standby (follow A-UUT vendor guidelines to force the host in standby mode).
3. Attach Peripheral.
4. Take the A-UUT out of standby mode (A-UUT may also come out of standby automatically on attach).
5. Verify that A-UUT behaves normally.
6. Prove the functionality of the peripheral.

End of test.

If different types of standby modes are supported repeat the test until all modes have been tested.

7.3.16 A-UUT Standby Topology Change test

Purpose	Prove the standby functionality of the OTG A-device or EH when the topology changes during standby.
Applies to	An OTG device or EH which supports both hubs and standby. An EH with multiple ports which supports standby.
Description	Switch the topology of TPL peripherals while the A-UUT is in standby, verify that the A-UUT does not behave abnormally after the A-UUT leaves standby mode.
Test setup	At least one TPL peripheral. May require a hub.
Preconditions	The A-UUT is powered ON Use a Micro-A plug to Standard-A Receptacle adapterif product is an OTG device.
Checklist	C2
Pass Criteria	Compliant standby behavior is observed.

7.3.16.1 Test procedure

1. Power ON the A-UUT.
    a. If the product is an OTG device with a Micro-AB receptacle then attach Micro-A plug to Standard-A Receptacle adapter.
    b. If the B-device requires external power, power on the B-device.
2. Attach a hub (if required)
3. Attach the B-device and prove functionality.
4. Place the A-UUT into standby (follow A-UUT vendor guidelines to force the host in standby mode).
5. Detach the B-device and attach it to another EH port or another downstream hub port.
6. Take the A-UUT out of standby mode standby (A-UUT may also come out of standby automatically on attach).
7. Verify that A-UUT behaves normally.
8. Prove functionality of the B-device.

End of test.

If different types of standby modes are supported repeat the test until all modes have been tested.

7.3.17 A-UUT Standby Remote Wakeup test

Purpose	Prove the remote wakeup functionality of an OTG A-device or EH.
Applies to	OTG A-devices or EH's which support standby and remote wakeup.
Description	Perform a USB remote wakeup event and verify that the A-UUT operates correctly after the A-UUT leaves standby mode.
Test setup	At least one TPL peripheral which supports remote wakeup.
Preconditions	The A-UUT is powered ON. Use Micro-A plug to Standard-A Receptacle adapter if the product is an OTG device.
Checklist	C2
Pass Criteria	Compliant standby behavior is observed when a remote wakeup event is performed during standby.

7.3.17.1 Test procedure

1. Power ON the A-UUT.
    a. If the product is an OTG device with a Micro-AB receptacle then attach a Micro-A plug to Standard-A Receptacle adapter.
    b. If the B-device requires external power, provide power to the B-device.
2. Attach the B-device.
3. Prove the functionality of the A-UUT with the B-device.
4. Put the A-UUT into standby (follow A-UUT vendor guidelines to force the host in standby mode).
5. Perform a USB remote wakeup event from the B-device.
6. Prove the functionality of the A-UUT with the B-device.

End of test.

7.3.18 OTG to OTG test

Purpose	Prove the functionality of two attached OTG devices
Applies to	OTG devices that have OTG devices on their TPL. This test is not relevant to devices that do not support OTG Symmetry requirements.
Description	Prove the functionality when connecting two OTG devices
Test setup	One OTG device taken from the TPL Micro-A plug to Micro-B plug cable
Preconditions	The UUT is powered ON The supported OTG device powered ON
Checklist	TPL13, M6, MSG12
Pass Criteria	The functionality between two products is proved and is the same regardless of the cable direction. When the OTG device does not work a clear error message shall be shown to the user on the OTG device they are currently using.

7.3.18.1 Test procedure

1. Power ON the UUT.
2. Attach the Micro-A plug to the UUT.
3. Attach the Micro-B plug to the supported OTG device.
4. Prove the functionality of the UUT with the OTG B-device.
5. Detach cable on both sides.
6. Attach the Micro-B plug to the UUT.
7. Attach the Micro-A plug to the supported OTG device.
8. Prove that the functionality is the same functionality as seen in step1.

End of test.

8 USB-IF Required Tests

Devices which support features of [USBOTG&EHv2.0] shall undergo additional testing beyond the tests described in this document. This additional testing is a subset of existing tests for USB peripherals and USB host controllers.

Table 8-1 describes which tests are required for full USB-IF certification by an EH with a Standard-A connector.

Table 8-2 describes which tests are required for full USB-IF certification by an EH with a Micro-AB connector.

Table 8-3 describes which tests are required for full USB-IF certification by an OTG device.

Table 8-4 describes which tests are required for full USB-IF certification by an EH B-port (not a Micro-AB host port) or a Peripheral-only B-device.

The following symbols are used in these tables:

✓ Always required
* Required if feature is supported
** Required if there are multiple downstream ports

Table 8-1: Embedded Host test requirements for Standard-A connector

USB-IF test ► USB speed ▼	Automated Test Ch6	Manual Test Ch7	Droop	DS LS SQT	DS FS SQT	DS HS Electrical
High Speed Host	✓	✓	**	*	*	✓
Full Speed Host	✓	✓	**	*	*	
Low Speed Host	✓	✓	**	✓		

Table 8-2: Embedded Host test requirements for Micro-AB connector

USB-IF test ► USB speed ▼	B			A					
	Avg Current	Back-Voltage	Inrush	Automated Test c h6	Manual Test Ch7	Droop	DS LS SQT	DS FS SQT	DS HS Electrical
High Speed Host	✓	✓	✓	✓	✓	**	*	*	✓
Full Speed Host	✓	✓	✓	✓	✓	**	*	*	
Low Speed Host	✓	✓	✓	✓	✓	**	✓		

Table 8-3: OTG device test requirements

USB-IF test ► USB speed ▼	B							A				A/B
	IOP Goldtree	Avg Current	USBCV	Back-Voltage	US HS Electrical	US FS SQT	Inrush	DS HS Electrical	DS FS SQT	DS LS SQT	Manual Test Ch7	Automated Test Ch6
FS B/ FS A	✓	✓	✓	✓		✓	✓		✓	*	✓	✓
HS B/ FS A	✓	✓	✓	✓	✓	✓	✓		✓	*	✓	✓
FS B/ HS A	✓	✓	✓	✓		✓	✓	✓	✓	*	✓	✓
HS B/HS A	✓	✓	✓	✓	✓	✓	✓	✓	✓	*	✓	✓

Table 8-4: EH B-Port and Peripheral-only B-device test requirements

USB-IF test ► USB speed ▼	IOP Goldtree	Avg Current	USBCV	Back-Voltage	US HS Electrical	US FS SQT	Inrush	Automated Test Ch6
FS B	✓	✓	✓	✓		✓	✓	✓
HS B	✓	✓	✓	✓	✓	✓	✓	✓

8.1 Description of required tests

The following sections briefly describe each of the required tests. For a full description of the tests please refer to the links given in Section 8.2.

8.1.1 IOP Goldtree

The interoperability Goldtree is the interoperability functionality test of the B-device.

8.1.2 Avg Current

Measure the average current when the device is in worst case power consumption during Unconfigured, Configured, Active and Suspend modes. For HS devices this shall be done in HS and FS mode.

For battery charging devices please also check the Battery Charging compliance program.

8.1.3 USBCV

The USB20CV and USB30CV Chapter 9 tests shall be performed. If supported device class specific tests should such as MSC, HID, OTG, UVC, PHDC, HUB should also be performed.

For HS device these tests shall be done in both HS and FS mode.

8.1.4 Back-Voltage

Check that no voltage is driven back from the device to the host when not connected.

8.1.5 US HS Electrical

Upstream high speed electrical.

8.1.6 US FS SQT

Upstream Full Speed signal quality. Measure using a 2m cable.

8.1.7 Inrush

The inrush current event.

8.1.8 DS HS Electrical

Downstream High Speed Electrical tests. Note: it is mandatory for the Host to enter the required HS electrical test modes via PID/VID detection (See [USBOTG&EHv2.0]).

8.1.9 DS FS SQT

Downstream Full Speed Signal Quality. Measure using a 5m cable.

8.1.10 DS LS SQT

Downstream Low Speed Signal Quality. A LS device must have a captive cable and therefore its only possible to measure at the end of the cable with the A-Plug.

8.1.11 Droop

If EH has multiple downstream ports the droop effect on the other port may not exceed 330mV.

8.1.12 Automated Test Ch6

See Section 6 of this document.

8.1.13 Manual Test Ch7

See Section 7 of this document.

8.2 Test procedures and tools

The test procedures can be found at: http://www.usb.org/developers/docs/

Updates on these procedures can be found at:
http://compliance.usb.org/http://compliance.usb.org/

The tools used can be found at: http://www.usb.org/developers/tools/

Technical questions relating to compliance should be sent to techadmin@usb.org.