USB 3.1 Electrical Test Fixture Topologies & Tools

November 8, 2017

Revision History

Revision	Author	Section	Change
0.1	Jesse Templin	All	First draft
0.2	Jesse Templin	4, 5	Added CC jumpers and SigTest Templates
0.3	Jesse Nielsen	2.2, 5.1	Updated mock fixture value, added TJ calibration template
0.4	Jesse Nielsen	All	Updated Captive Fixture Descriptions

Referenced Documents

EnhancedSuperSpeedPHYComplianceTestSpec_1_4_17
USB30_ElectricalTestFixture_Topologies.pdf

Contents

1. Transmitter Tests 1
   1.1. Tx: Standard-A & Micro-B 1
   1.2. Tx: Type-C 2
2. Receiver Calibration 3
   2.1. Rx Cal: Standard-A & Micro-B 3
   2.2. Rx Cal: Type-C Gen2 4
3. Receiver Tests 5
   3.1. Rx: Standard-A & Micro-B 5
   3.2. Rx: Type-C Gen1 6
   3.3. Rx: Type-C Gen2 7
   3.4. Rx: Type-C Gen1&2 Short Channel 8
4. CC Jumpers 9
5. SigTest Templates 10
   5.1. Gen1 10
   5.2. Gen2 10

1. Transmitter Tests

1.1. Tx: Standard-A & Micro-B

See TD.1.1, TD.1.3, TD.1.4, TD.1.5, TD.1.6, and TD.1.7 in the CTS.
Use the same setup for long and short channel tests.

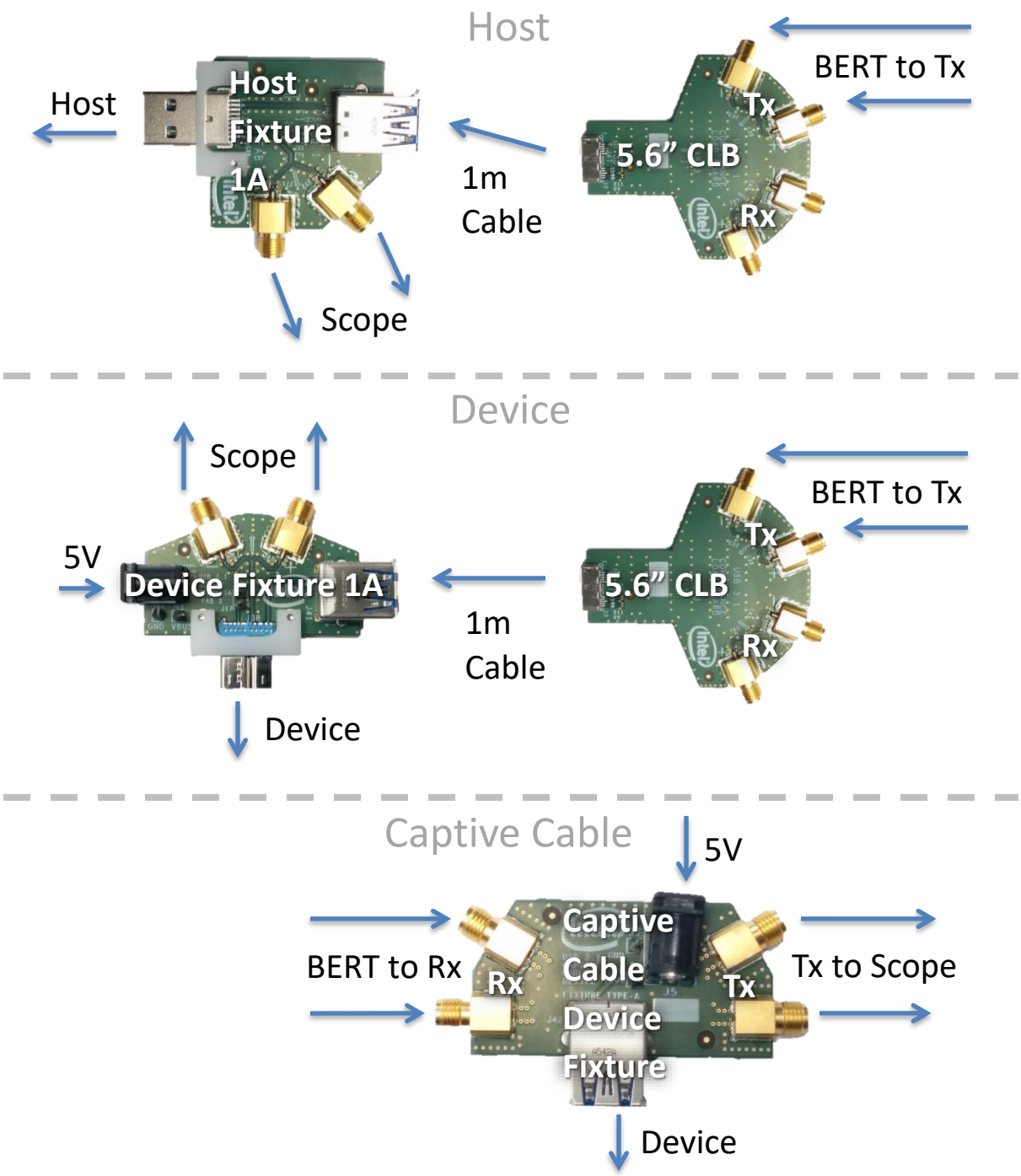

1.2. Tx: Type-C

See TD.1.1, TD.1.3, TD.1.4, TD.1.5, TD.1.6, and TD.1.7 in the CTS.
Use the same setup for long and short channel tests.
Connect jumpers as shown in section 4.
Tx1 or Tx2 can be used on the CLB and Host/Device 1C.
Tx1&Rx1 or Tx2&Rx2 can be used on the Captive Fixture.

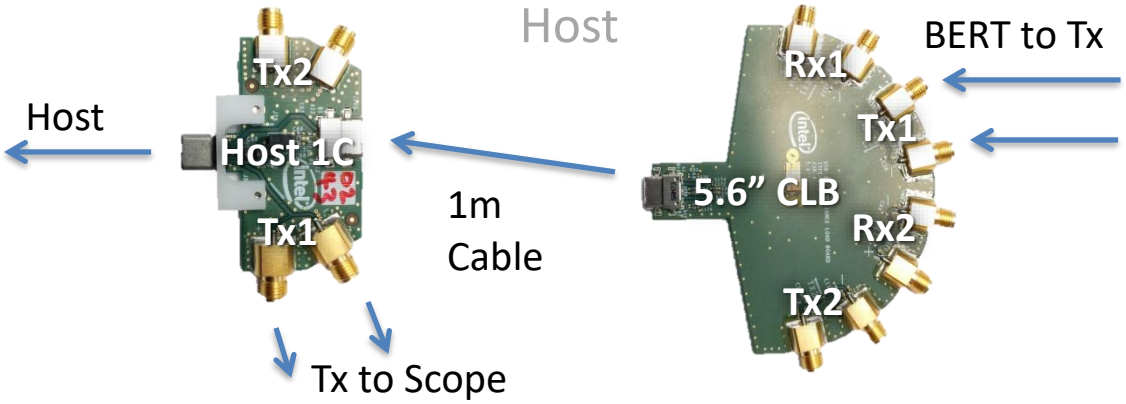

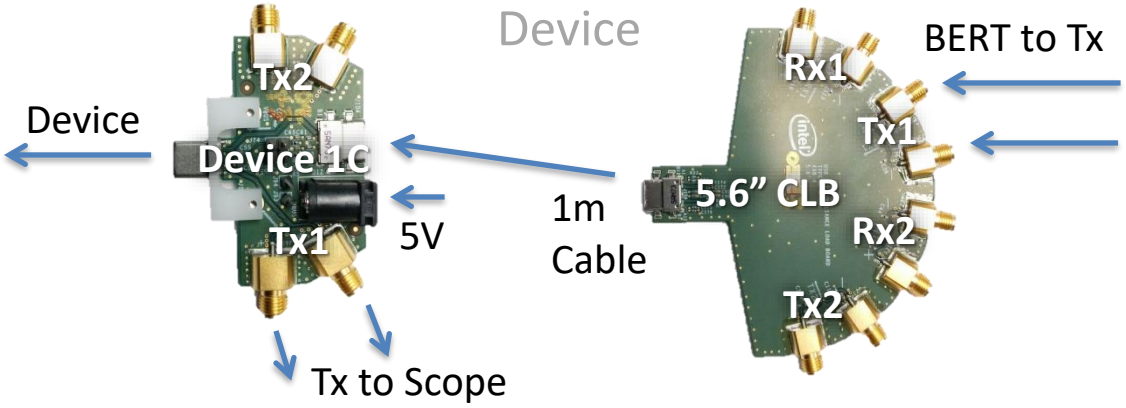

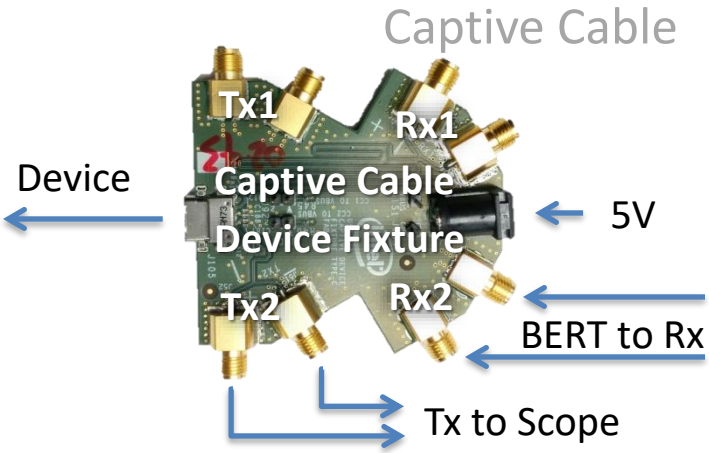

2. Receiver Calibration

2.1. Rx Cal: Standard-A & Micro-B

See TD.1.8 and TD.1.10 in the CTS.

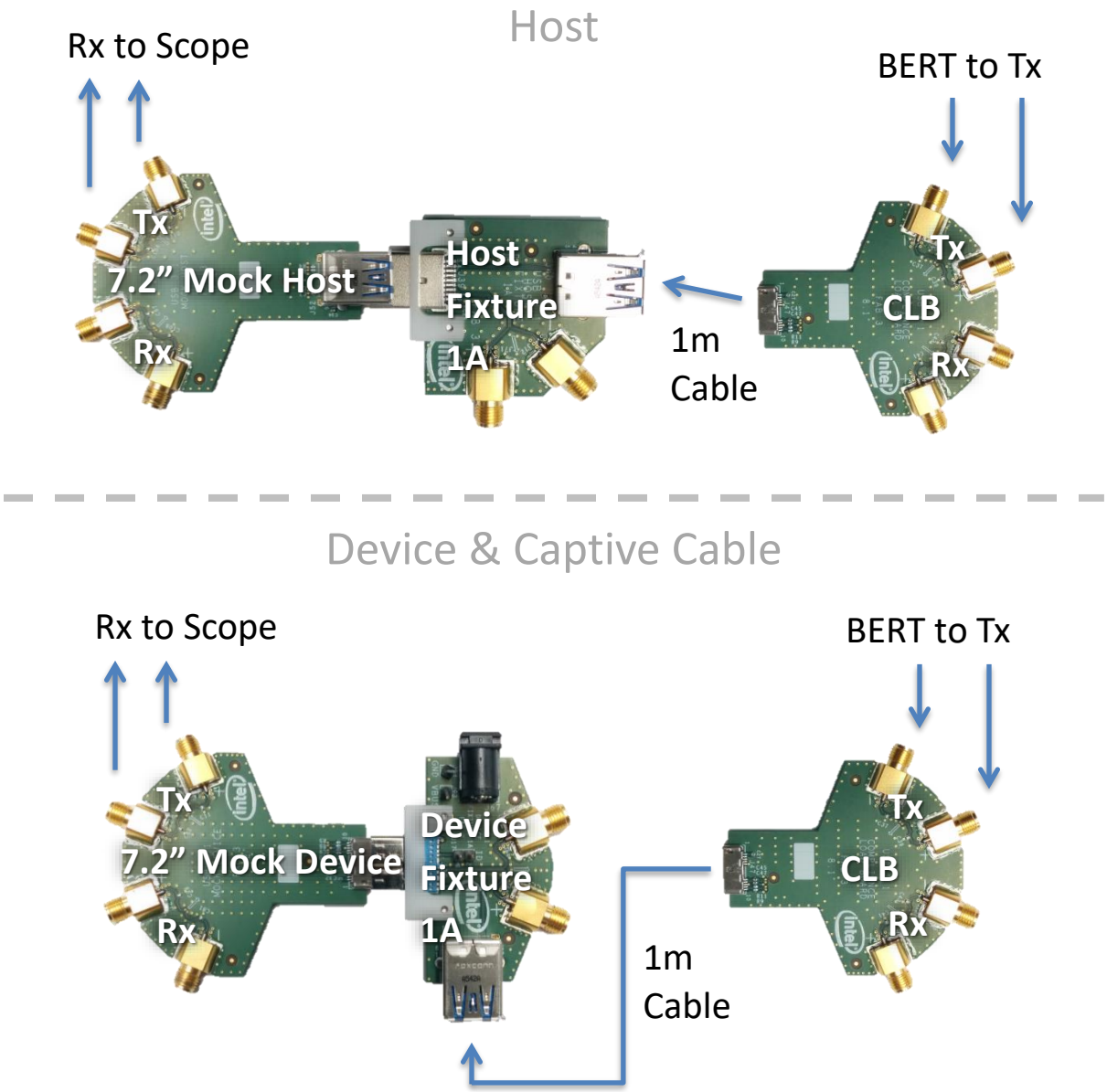

2.2. Rx Cal: Type-C Gen2

See TD.1.10 in the CTS.
Connect jumpers as shown in section 4.
Tx1 or Tx2 can be used on the CLB.
Rx1 or Rx2 can be used on the Mock board.
There is no fixture calibration for Type-C Gen1.

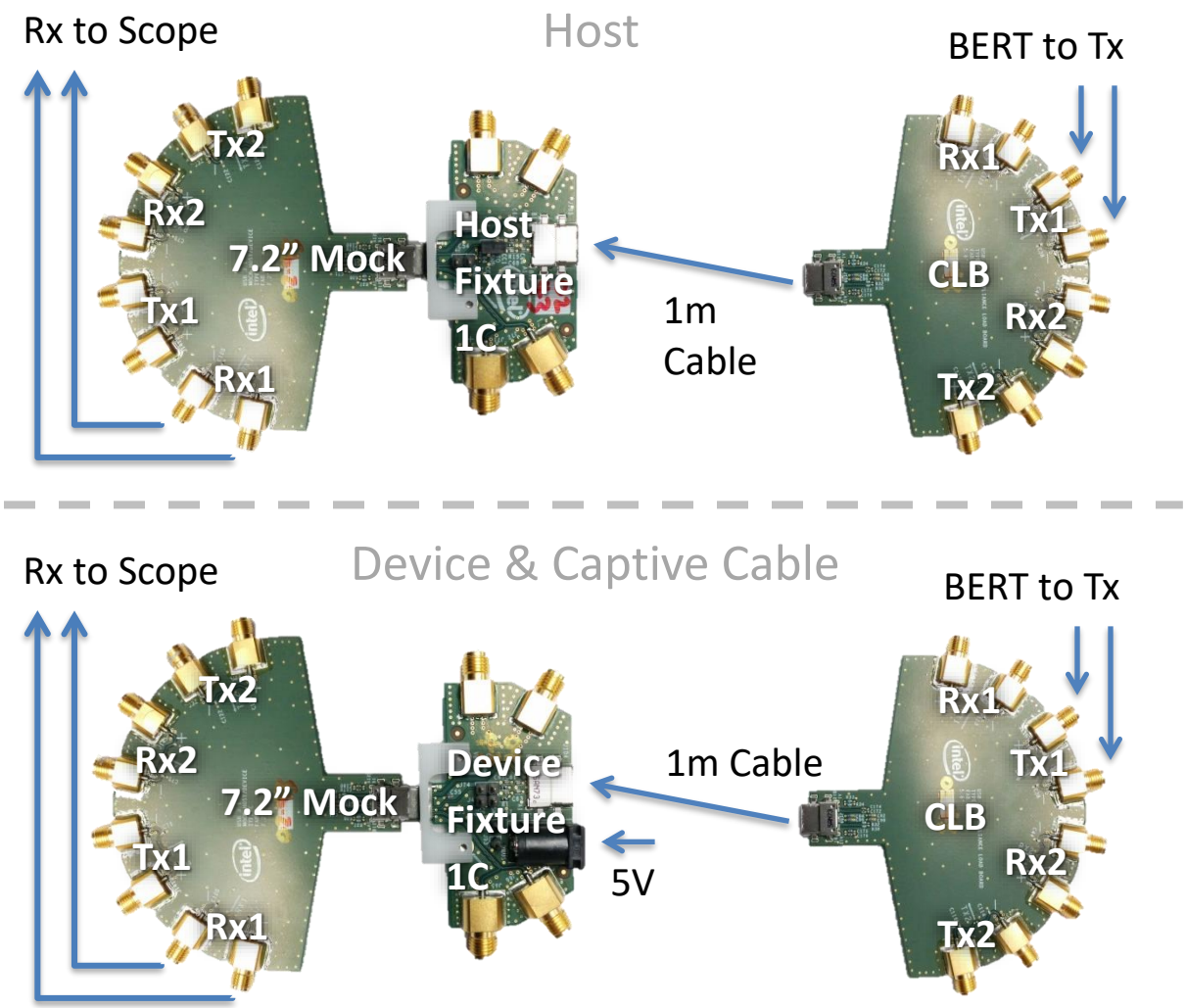

3. Receiver Tests

3.1. Rx: Standard-A & Micro-B Gen 2

See TD.1.8, and TD.1.10 in the CTS.
Standard-A and Micro-B Gen 1 Rx Tests require USB 3.0 or 3.1 fixtures.
As of January 2017, there is no official short channel fixture for Standard-A and Micro-B Rx testing.
Use a third party Gen1 short channel fixture.

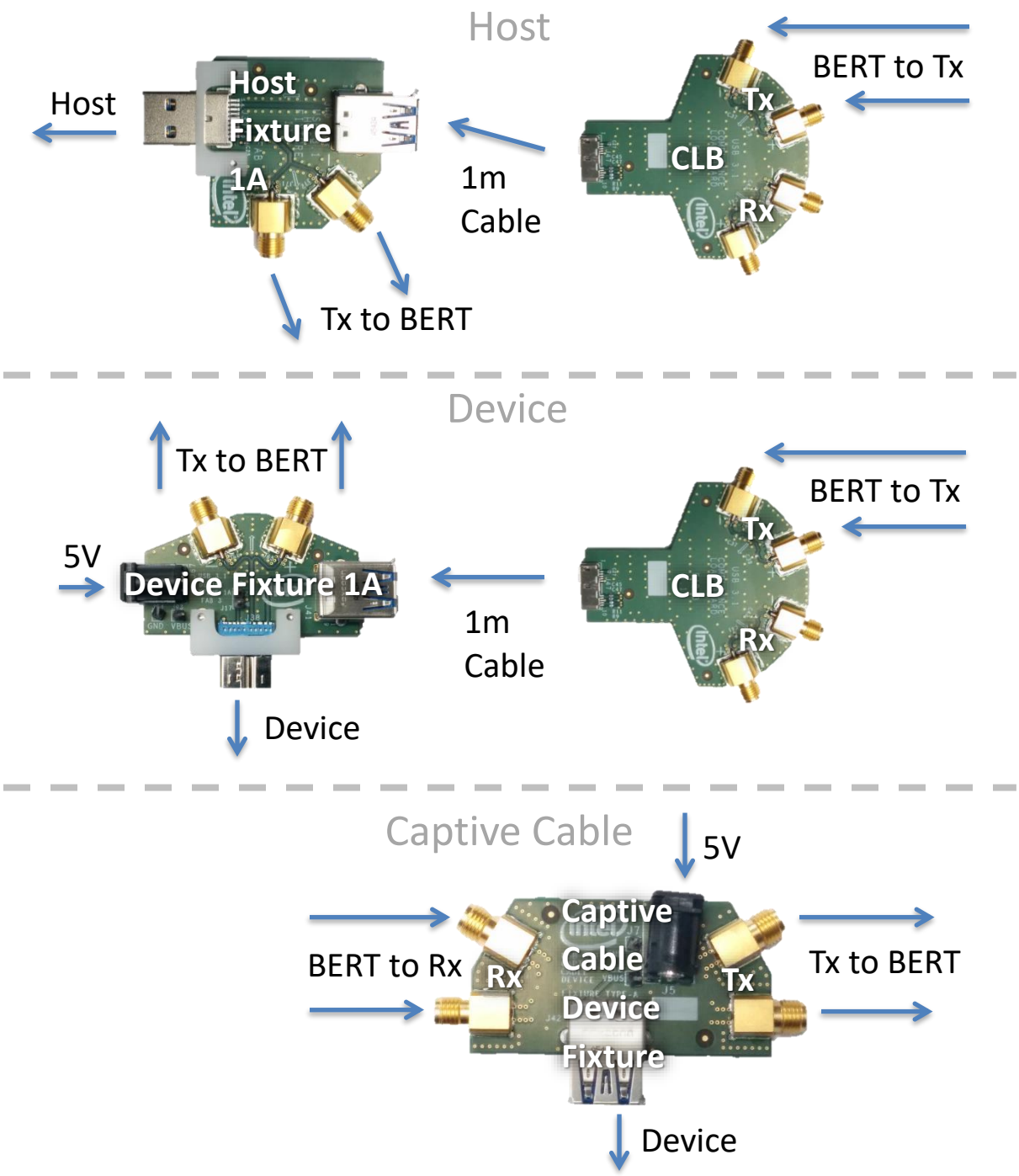

3.2. Rx: Type-C Gen 1

See TD.1.9 in the CTS.
Connect jumpers as shown in section 4.
Tx1 or Tx2 can be used on the CLB and Host/Device 1C.
Tx1&Rx2 or Tx2&Rx2 can be used on the Captive Fixture.

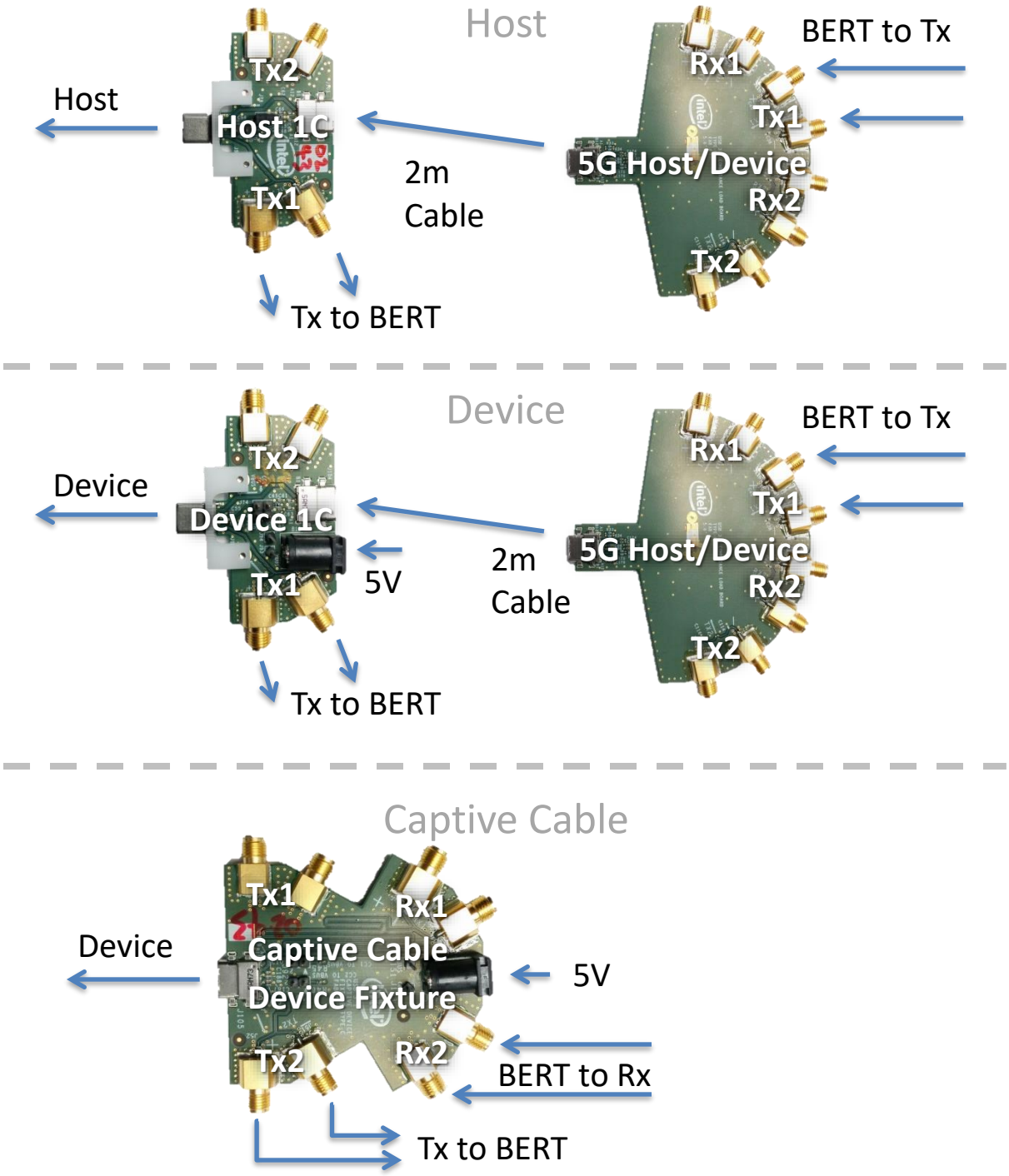

3.3. Rx: Type-C Gen2

See TD.1.10 in the CTS.
Connect jumpers as shown in section 4.
Tx1 or Tx2 can be used on the CLB and Host/Device 1C.
Tx1&Rx2 or Tx2&Rx2 can be used on the Captive Fixture.

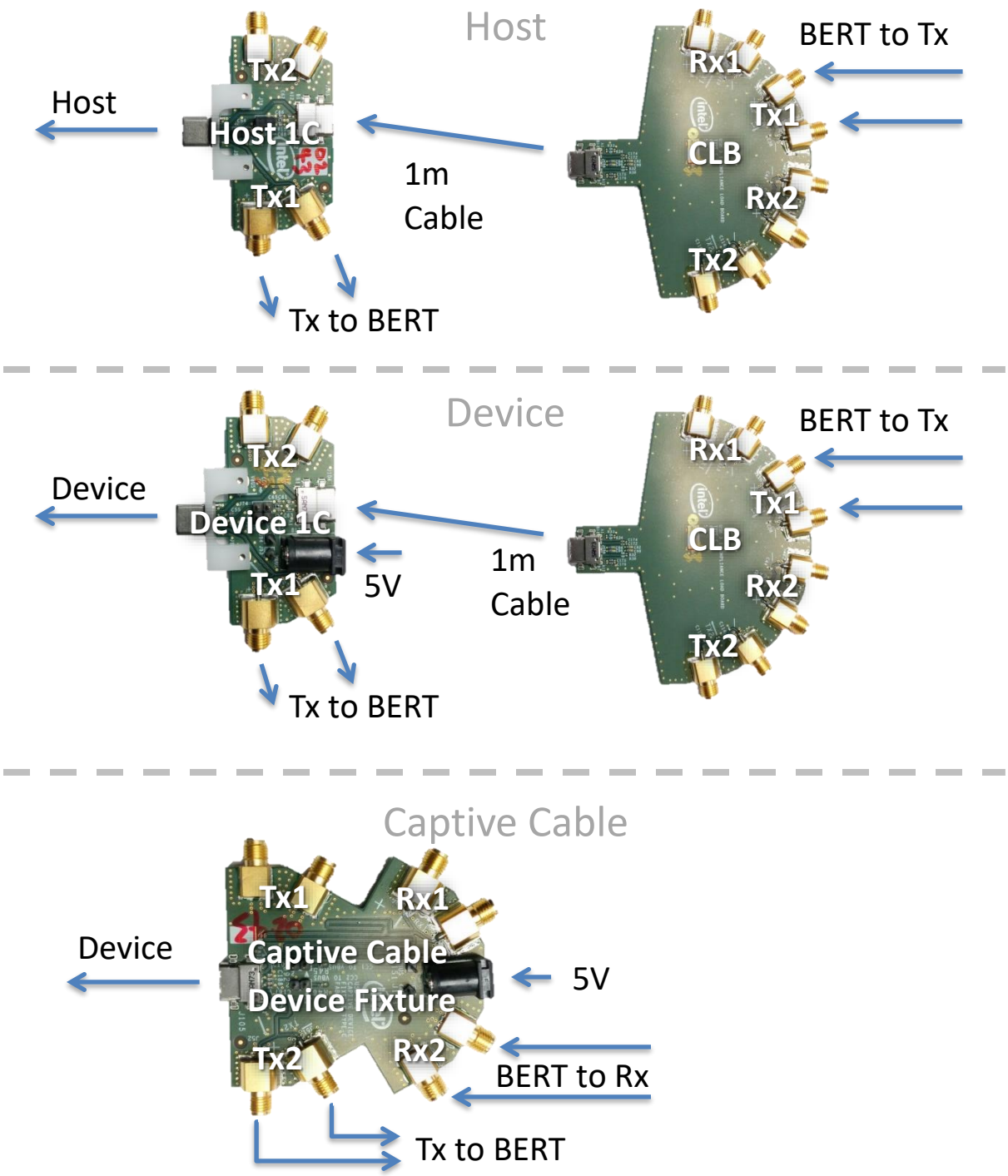

3.4. Rx: Type-C Gen1&2 Short Channel

See TD.1.2 and TD.1.10 in the CTS.
Connect jumpers as shown in section 4.
Tx1&Rx1 or Tx2&Rx2 can be used on the Full Breakout.

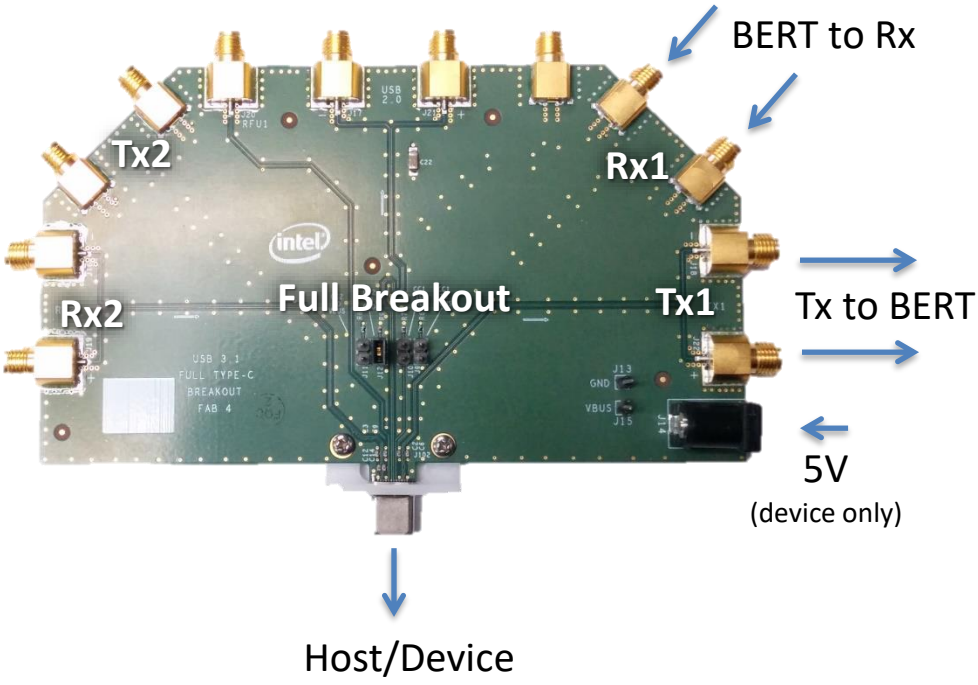

4. CC Jumpers

Only use one jumper.
Place a jumper on CC1 if SMAs are connected to Tx1/Rx1.
Place a jumper on CC2 if SMAs are connected to Tx2/Rx2.
When using the Full Breakout, connect CC to Vbus for devices, or connect CC to GND for hosts.

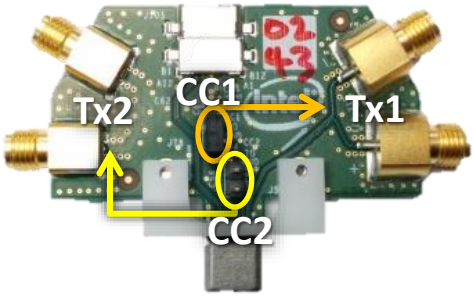

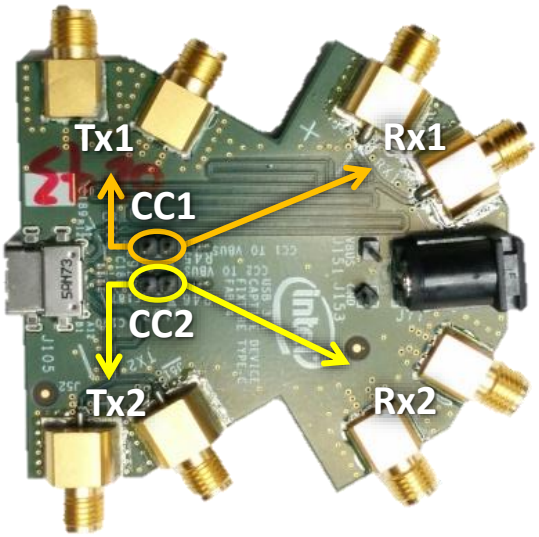

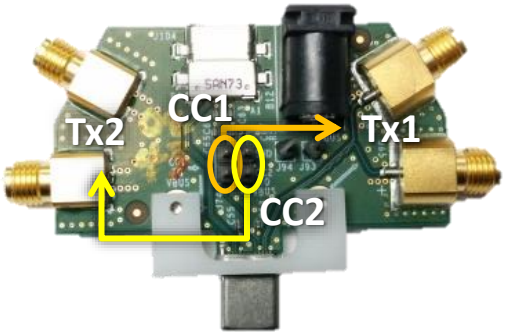

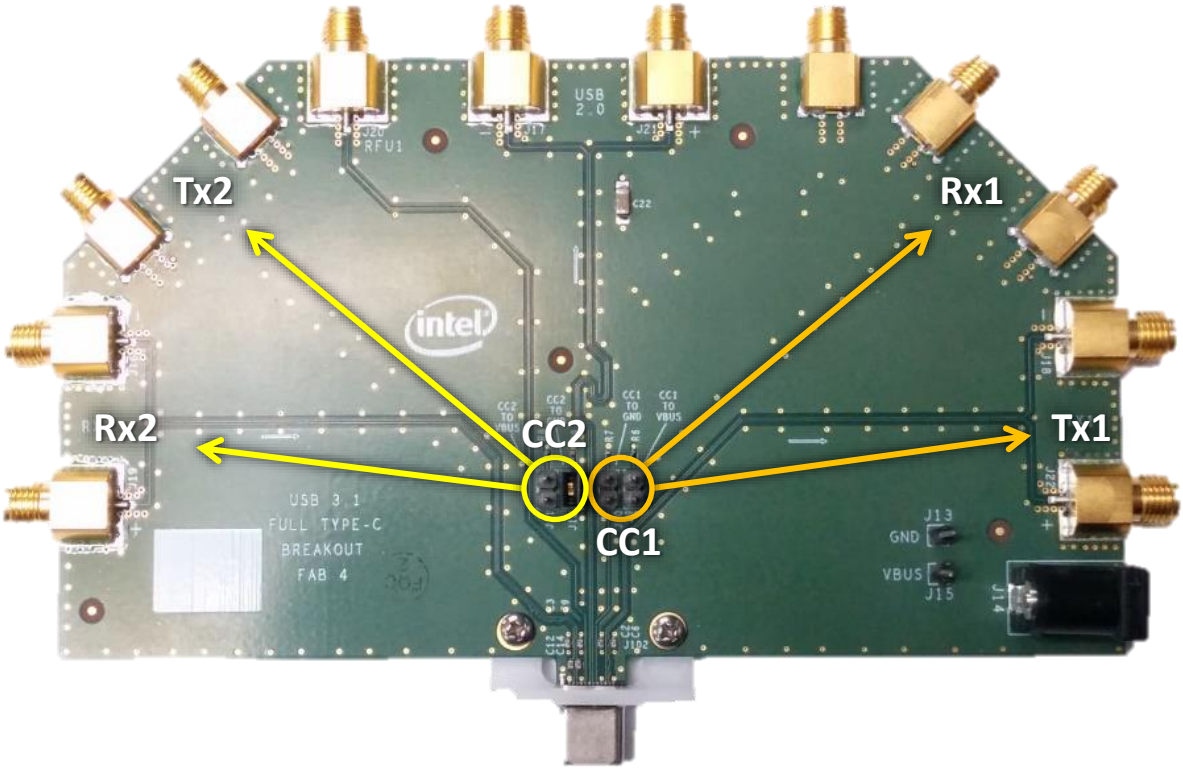

5. SigTest Templates

Please refer to the USB-IF website for the SigTest installers. There is one version for Gen1 and a different version for Gen2 testing. The SSC Profile test (both Gen1 & Gen2) must be performed with the Gen2 version.

5.1. Gen1

Test #	Description	Tx/Rx	SigTest Folder	SigTest Template File Name
TD.1.1	Tx LFPS Test	Tx	USB_3_5GB	USB_3_LFPS.dat
TD.1.3	Tx Rj Computation	Tx	USB_3_5GB	USB_3_5Gb_CP1.dat
TD.1.3	Tx Test	Tx	USB_3_5GB	USB_3_5Gb_CP0_RjIN.dat
TD.1.3	Tx Test (Short Channel)	Tx	USB_3_5GB	USB_3_5Gb_CP0_RjIN_SHORT.dat
TD.1.6	Tx SSC Profile Test	Tx	USB_3_5GB	USB_3_5Gb_SSC_Profile_Test.dat
TD.1.8	Rj Calibration	Rx Cal	USB_3_5GB	USB_3_5Gb_CP1.dat
TD.1.9	Rj Calibration (Type-C)	Rx Cal	USB_3_5GB	USB_3_5Gb_CP1_Rj_Cal_Type_C.dat
TD.1.8	Sj Calibration	Rx Cal	USB_3_5GB	USB_3_5Gb_CP0_RjIN_SjCal.dat
TD.1.9	Sj Calibration (Type-C)	Rx Cal	USB_3_5GB	USB_3_5Gb_CP0_RjIN_SjCal_Type_C.dat
TD.1.8	Tj Calibration	Rx Cal	USB_3_5GB	USB_3_5Gb_CP0_RjIN.dat
TD.1.8	EW/EH Calibration	Rx Cal	USB_3_5GB	USB_3_5Gb_CP0_RjIN.dat

5.2. Gen2

Test #	Description	Tx/Rx	SigTest Folder	SigTest Template File Name
TD.1.4	Tx Rj Computation	Tx	USB_3_10GB	USB_3_10Gb_CP10_Tx_Rj_Test.dat
TD.1.4	Tx Test	Tx	USB_3_10GB	USB_3_10Gb_CP9_Tx.dat
TD.1.4	Tx Test (Short Channel)	Tx	USB_3_10GB	USB_3_10Gb_CP9_Tx_Short.dat
TD.1.7	Tx SSC Profile Test	Tx	USB_3_10GB	USB_3_10Gb_SSC_Profile_Test.dat
TD.1.5	Tx Equalization Test	Tx	N/A	N/A (Preset GUI Button)
TD.1.10	Rj Calibration	Rx Cal	USB_3_10GB	USB_3_10Gb_Rj_Cal.dat
TD.1.10	Sj Calibration	Rx Cal	USB_3_10GB	USB_3_10Gb_Sj_Cal.dat
TD.1.10	EW/EH Calibration	Rx Cal	USB_3_10GB	USB_3_10Gb_CP9_Rx_CAL_CTLE_N5dB.dat